BASIC TECHNICAL DRAWING

Student Textbook

Grade 12

Prepared by:

Amanuel Berhanu (BSc.)
Tolossa Deberie (MSc.)

Editor:

Tolossa Deberie (MSc.)

Reviewed by:

Abebe Basazeneu
Natenael Abebe
Yared Mekuria

FEDERAL DEMOCRATIC REPUBLIC OF ETHIOPIA
MINISTRY OF EDUCATION

KURAZ INTERNATIONAL
PUBLISHER

© MoE, FDR Ethiopia
Not to be republished

Acknowledgements

The redesign, printing and distribution of this student textbook has been funded through the General Education Quality Improvement Project (GEQIP), which aims to improve the quality of education for Grades 1–12 students in government schools throughout Ethiopia.

The Federal Democratic Republic of Ethiopia received funding for GEQIP through credit/financing from the International Development Associations (IDA), the Fast Track Initiative Catalytic Fund (FTI CF) and other development partners – Finland, Italian Development Cooperation, the Netherlands and UK aid from the Department for International Development (DFID).

The Ministry of Education wishes to thank the many individuals, groups and other bodies involved – directly and indirectly – in publishing the textbook and accompanying teacher guide.

Every effort has been made to trace the copyright holders of the images and we apologise in advance for any unintentional omission. We would be pleased to insert the appropriate acknowledgement in any subsequent edition of this publication.

© Federal Democratic Republic of Ethiopia, Ministry of Education
First edition, 2003(E.C.)

Developed, printed and distributed for the Federal Democratic Republic of Ethiopia, Ministry of Education by:

Al Ghurair Printing and Publishing House CO. (LLC)
PO Box 5613
Dubai
U.A.E.

In collaboration with

Kuraz International Publisher P.L.C
P.O. Box 100767
Addis Ababa
Ethiopia

ISBN: 978-99944-2-096-4

All rights reserved. No part of this publication may be reproduced, stored in a retrieval system or transmitted in any form or by any means (including electronic, mechanical, photocopying, recording or otherwise) either prior written permission of the copyright owner or a licence permitting restricted copying in Ethiopia by the *Federal Democratic Republic of Ethiopia, Federal Negarit Gazeta ,Proclamation No. 410/2004 Copyright and Neighbouring Rights Protection Proclamation, 10th year, No. 55, Addis Ababa, 19 July 2004.*

Disclaimer

Every effort has been made to trace the copyright owners of material used in this document. We apologise in advance for any unintentional omissions. We would be pleased to insert the appropriate acknowledgement in any future edition.

© MOE, FDR Ethiopia
Not to be republished

Table of Contents

Page

UNIT 1. FREE HAND SKETCHING 1

1.1 Introduction 2

1.2 Uses of Freehand Sketching 4

1.3 Types of Freehand Sketching 4

1.4 Sketching Materials 5

1.5 Fundamentals of Sketching 8

Unit Summary 29

UNIT 2. AUXILIARY VIEWS 32

2.1 Introduction 33

2.2 Overview of Orthographic Projection 34

2.3 Auxiliary Projection of Objects 44

2.4 Types of Auxiliary Views 47

Unit Summary 53

UNIT 3. SECTIONAL VIEW 56

3.1 Introduction 57

3.2 Cutting Plane and Section Lining 58

3.3 Visualizing a Sectional View 60

3.4 Types of Sectional View 61

3.5 Other Sectional View Representation 67

3.6 Conventional Representations in sectioning 69

Unit Summary 72

© FDRE Ethiopia Not to be republished

UNIT 4. DIMENSIONING 80
4.1 Introduction 81
4.2 Lines and Symbols 81
4.3 Reading Direction of Figures 82
4.4 Theory of Dimensioning 83
4.5 Methods of Dimensioning 85
4.6. Placement of Dimension 89
Unit Summary 92
UNIT 5. DEVELOPMENT AND INTERSECTION 95
5.1. Introduction 96
5.2 Development 98
5.3 Intersection Between Geometrical Solids 114
Unit Summary 122

© MoE, FDR Ethiopia
Not to be republished

UNIT 2

AUXILIARY VIEWS

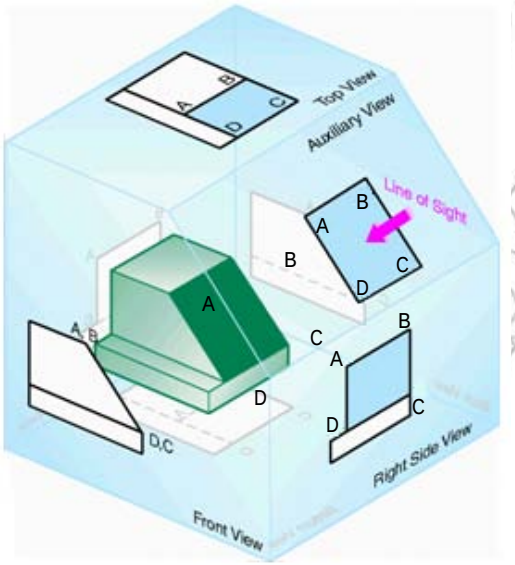

Learning Competencies:

At the end of this chapter you will have through understanding on the following topics.

- **The basic principle of orthographic projection;**
- **The type, use and application of auxiliary views ;**
- **Draw primary and secondary auxiliary views;**
- **Use reference lines properly as an aid in constructing auxiliary views;**
- **Construct partial and complete auxiliary views.**

© Not to be published

2.1 Introduction

1. Form a group and discuss on projection, principal planes of projection and types of planes from your past experience of grade 11.
2. How do you find the true shape of a surface which is not parallel to the principal planes?

In many objects there are external surfaces that are inclined to one or all of the three principal planes of projection. The projection of the object on any of the principal projection planes will not give the actual size and shape descriptions of these inclined faces. For practical reasons, it is essential to know the true size and shape description of the surfaces for accurate manufacturing of objects. When it is desired to show the true size and shape of a non principal surface, the object should be projected on a plane parallel to that surface. This additional imaginary projection plane is known as *auxiliary plane*, and the resulting view obtained is thus an *auxiliary view*.

The underlying basic principles of projecting principal views of an object are also applied to auxiliary views. That is, auxiliary projection is a kind of orthographic projection as viewed by an observer stationed at infinite distance away from an object and looking towards the object perpendicular to its inclined surface.

In this chapter, the basic principles of auxiliary projection of an object will be discussed.

Uses of Auxiliary Views

1. What do you think is the importance of auxiliary view?
2. How can you project the true shape of an inclined plane on orthographic projection?

Inclined features on an object that are not parallel to any of the principal planes of projection always appear foreshortened and distorted in the regular views of the object. The true shape of such a surface is shown only when the line of sight is in a direction perpendicular to the plane of projection. In Fig.2.1, the shaded surface of the object is an inclined feature that does not appear in true size and shape in either of the front or right side views.

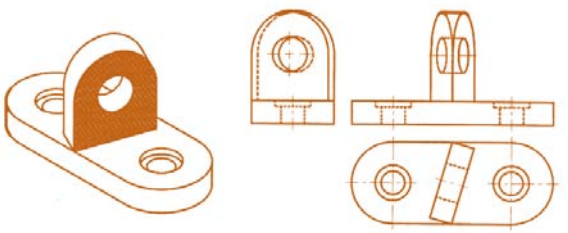

a) Pictorial representation b) Orthographic views

Fig. 2.1 Principal views of an object with inclined features

The true shape and relationship of such inclined features are shown by appropriate auxiliary views. Auxiliary views are aligned with the views from which they are projected, and this enables an observer to view objects orthographically from any desired position. The shaded surface in Fig.2.2 is shown in its true shape and size on the auxiliary plane; because in this view the line of sight is perpendicular to the inclined surface.

© MoE FDR Ethiopia Not to be Licensed

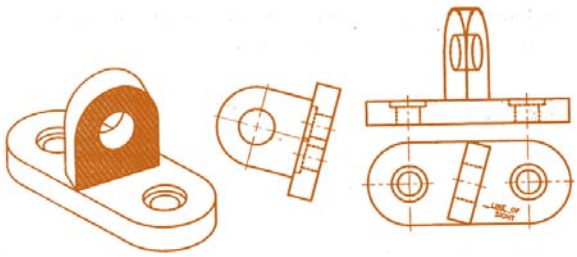

a)Pictorial representation b) Orthographic views

Fig.2.2 Uses of auxiliary view

In general, auxiliary views are used for determining;

- the true length and inclinations of a line,
- the point view of a line and edge view of a plane,
- the true shape and size of a plane,
- the distance between two skew lines,
- the projections of solids,
- the true shapes of sections of solids,
- Curves of intersections, etc.

2.2 Overview of Orthographic Projection

The practical application of orthographic projection to the description of the geometry of three dimensional objects is very important. The geometry of relations between points, lines and planes is essential to the design of various products. On many occasions, different problems arise in technical drawing that may be solved easily by applying the basic principles of orthographic projection. Practical solid geometry or merely descriptive geometry deals with the representations of physical objects such as points, lines, planes and solid objects on various picture planes based on the principles of orthographic projection.

Before passing to those principles, it is worth noting to understand the following concepts clearly.

- *Reference Line (Folding or Hinge Line):* It is the line of intersection between two mutually perpendicular projection planes. Such lines are used as base lines from which all measurements of distances of points along the projectors are taken in relation to other projections. It is represented by a phantom line (a line pattern formed by a series of one long dash followed by two short dashes). It is named after the notation of the two intersecting perpendicular planes.
- *Horizontal-Projection (Top View):* It is a view of an object formed by an orthographic projection onto a horizontal projection plane. It is also called a plan or top view of the object. The projectors in horizontal projection are assumed to be vertical.
- *Elevation Views:* a view created on a picture plane placed perpendicular to the horizontal plane of projection. The picture plane is termed as elevation plane. The common types of elevation planes are the frontal and profile projection planes. Front and side views of an object are the *principal elevation views*. It is possible to have an infinite number of elevation views

© MoE FDR Ethiopia Not to be republished

other than the common ones. Such views are referred to as *auxiliary elevation views.* In all elevation views, the horizontal projection plane is always projected as a line.

2.2.1 Projection of a Point in Space

- Imagine a point in a space or in a room. Can you define the location of the point with respect to the wall, ceiling or floor in the case of a room?
  What is the relation b/n line and point?

A point in space can be considered as physically real object and represented by a small dot or a small cross. Its location in space is usually identified by finding two or more projection of the point. Orthographic projections of a point on various planes are obtained by extending projectors perpendicular to the picture planes and transferring distance from one plane to another in reference to the folding lines. Figure 2.3 shows a pictorial and orthographic representation of a point M situated z units distance above the horizontal plane, x units distance to the left of the profile plane and y units distance in front of the vertical plane. The front view is labeled as m_v, the top view is labeled as m_h and the left side view is labeled as m_p. The subscripts v, h and p signify the vertical plane, horizontal plane and profile plane respectively.

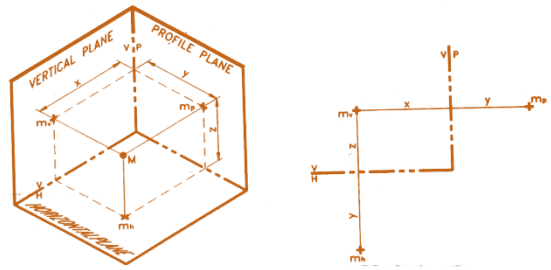

b) Pictorial representation b) Orthographic views

Fig. 2.3 Principal projections of a point

When the horizontal and profile projection planes in Fig.2.3(a) are rotated about the reference lines V/H and V/P respectively until both are in line with the vertical plane, the orthographic views shown in Fig. 2. 3 (b) will be obtained. Notice that distance z from this reference line to the vertical projection of the point (m_v) is the height of the point in space above the horizontal projection plane. Likewise, the length y on the horizontal projection plane represents the distance of point M in space from the vertical plane and so on. Now, let us further project the same point M on an auxiliary elevation plane (1), which is s-units distance from the point. (See Fig 2.4)

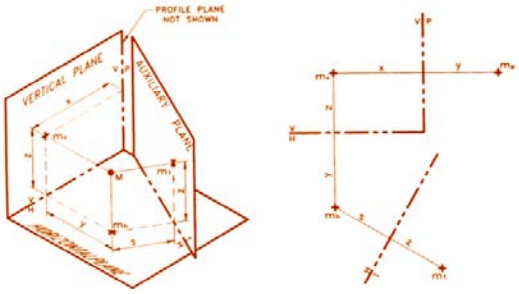

a) Pictorial representation b) Orthographic views

Fig.2.4 Auxiliary projection of a point

© MoE, FDRE Ethiopia Not to be republished

As illustrated in Fig.2.4 the auxiliary projection of the point (m_1) is also located at z distance from reference line H/1. This is because both the auxiliary plane (1) and the vertical plane (V) are perpendicular to the horizontal plane. Thus, the elevation z of point M in space above the horizontal plane will be truly projected on all elevation planes, which are perpendicular to the horizontal plane. The distance z on the vertical plane can therefore be directly transferred with the help of a divider to the elevation plane (1) in order to locate the position of m_1 accurately.

Checkpoint 2.1

Three points R, S and T in space are located according to the distances specified in the following table.

Point	R	S	T
In front of V.P.	32	13	18
Above the H.P.	26	34	15
To the Left of P.P.	41	14	12

Draw the principal projections of the three points on the same set of planes.

2.2.2 Projection of a Line

The projection of a straight line can be obtained finding the projections of the end points of the line and joining the respective projections by straight lines. Fig 2.5 shows the principal projections of line *MN* in space. As shown in the figure, the distance y of point *M* in front of the vertical plane is shown on both the horizontal and profile projection planes. This is because both planes are common perpendicular to the vertical plane. The projections of point *N* are also located in a similar way, at a distance of *y'* from the reference lines.

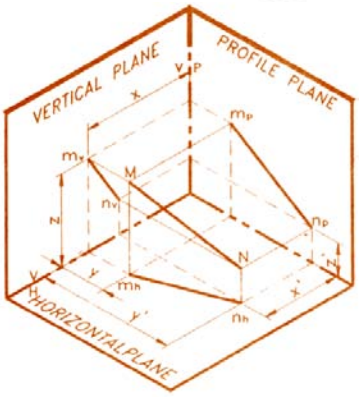

(a) Pictorial representation

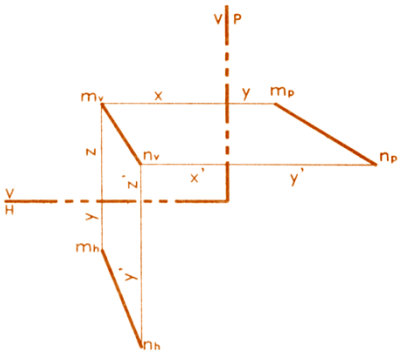

(b) Orthographic views

Fig. 2.5 principal projections of a line

Activity 2.1

1. Sketch a line when it is
   - parallel to the vertical plane
   - Parallel to the profile plane
   - Parallel to the horizontal plane and observe their appearances in different projection planes.
2. Imagine a line inclined to the three principal planes and show it's projection on the three projection planes with the help of sketch.
3. How do you think you can find the true length of an inclined line to all the principal planes?

© MoE FDRE Not to be republished

A. True Length Projection (Normal View) of a Line

A straight line will appear in true length when it is projected on to a plane of projection placed parallel to the line. Depending up on the picture plane with respect to which the line is parallel, straight lines are classified as: *front line, horizontal line,* and *profile line.*

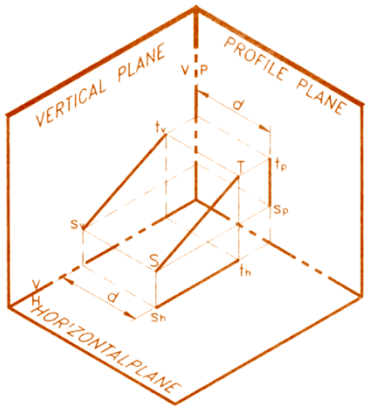

(a) Pictorial representation

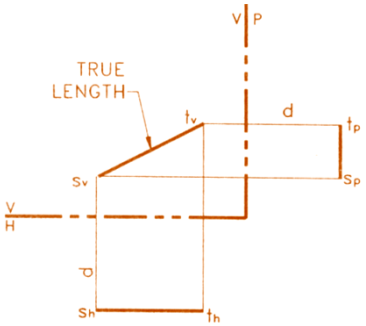

(b) Orthographic views

Fig. 2.6 Projections of a vertical line

(i) Frontal Line: A line parallel to the vertical plane of projection is termed as a frontal line. It appears in true length in the vertical picture plane. Line *ST* in Fig.2.6 is a frontal line because points *S* and *T* are located at the same distance d in front of the vertical plane. Note that the front view $s_v t_v$ of line *ST* is a true length projection.

(ii) Horizontal Line: A line parallel to the horizontal projection plane is called a horizontal line. It appears in true length in the horizontal plane of projection. Line PR shown in Fig.2.7 is a horizontal line with its end points located h distance above the horizontal plane.

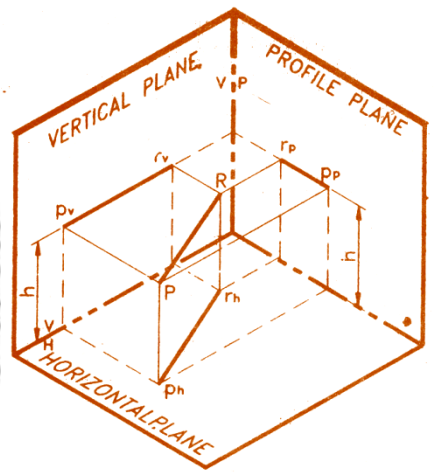

(a) Pictorial representation

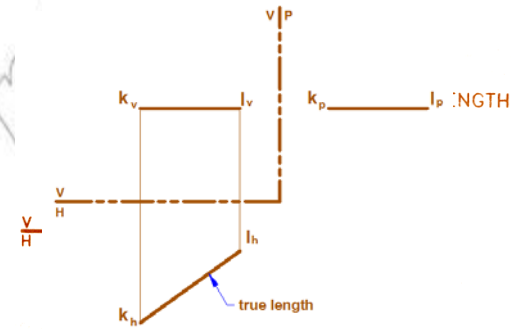

(a) Orthographic views

Fig. 2.7 Projections of a horizontal line

(iii) Profile Line: A line parallel to the profile plane of projection is known as a profile line. It appears in true length on the profile plane of projection. Fig.2.8 illustrates the principal

projection of a profile line KL, located at b distance from the profile plane.

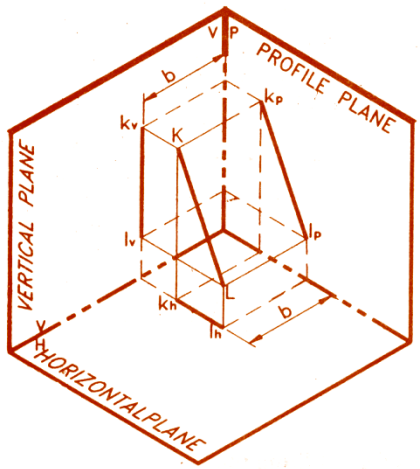

(a) Pictorial representation

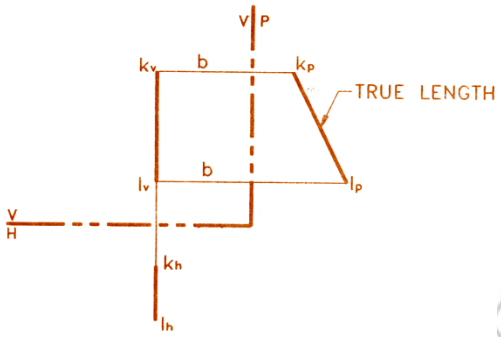

(b) Orthographic views

Fig. 2.8 Projections of a profile line

(iv) Oblique Line: A line inclined to all the three principal planes of projection is named as an oblique line. None of the three principal projections of this line appears in true length and non of the projections are parallel to anyone of the adjacent reference lines. Fig.2.9(a) shows the projection of an oblique line *WX*. To find the true length of this line, an auxiliary plane (1) parallel to the line and perpendicular to the, horizontal plane of projection is assumed. The position of this auxiliary plane on the horizontal plane of projection is shown by the reference line H/1, which is parallel to the top view w_h x_h of the line. Since both endpoints are at the same distance *a* from auxiliary plane (1), line WX is parallel to this plane in space and its projection onto the auxiliary plane is a true length projection.

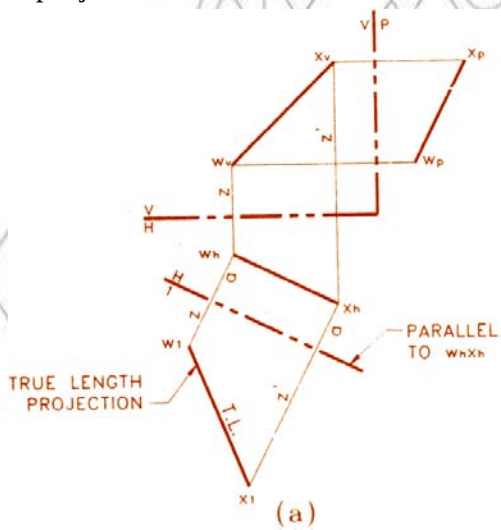

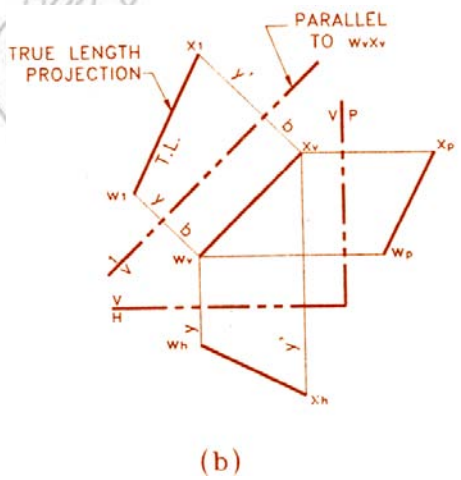

Fig. 2.9 True length projection of an Oblique line

© IGNOU FDR Not to be republished

In general, the following steps can be employed to determine the true length of an oblique.

Step 1: **Draw the vertical and horizontal projection of the oblique line.**

Step 2: **Parallel to the top view of the line and at any convenient distance from the top view, draw a reference line(example: line H/1), which is the auxiliary view of the horizontal plane of projection.**

Step 3: **Through end points of the horizontal projection, draw projectors perpendicular to the reference line.**

Step 4: **On the projectors constructed in step-3, set off the respective height locations of the end points to determine auxiliary projections of the end points. These distances can be obtained from vertical projection of the oblique line.**

Step 5: **Connect, by straight lines, auxiliary projections of the end points. This line represents the oblique line in true length.**

Notice that it was not necessary to use an auxiliary plane perpendicular to the horizontal plane to find the true length of line WX in Fig.2.9. The auxiliary plane could also be either perpendicular to the vertical plane and parallel to the front view $w_v x_v$ or perpendicular to the profile plane and parallel to the side view $w_p x_p$ of the line. Fig. 2.9(b) shows the use of an auxiliary plane (1) perpendicular to the vertical plane to find the true length of the same line. Here, the locations of w_1 and x_1 on auxiliary plane 1 can be transferred from either the horizontal plane or the profile plane since both are adjacent perpendicular planes to the vertical plane.

B. Bearing and Slope of a Line

1. Have you ever seen a traffic pole sign showing the degree of inclination on the road?
2. Can you define slope literally?
3. It is true that the sun rises in the east and sets in the north, but what is the direction flow of the sun? Is it towards the north or south that the sun travels to reach at the west?

The *bearing* of a line is the angle the horizontal projection of a line makes with respect to the points of the compass. It is given in degrees (0 to 90^0) measured from either north (N) or south (S) direction. The baring reading indicates the quadrant in which the line is located on the horizontal projection. The north line is usually assumed to be vertical unless a different direction is specified. For line AB shown in Fig.2.10, the bearing is given to be Nβ^0E.

Notice that in bearing representation, the North or South direction should be indicated first, the angle between the N-S line and the horizontal projection of the line is then specified next and finally its direction from the reference endpoint toward east or west is mentioned.

Slope of a line is the angle the line makes with the horizontal projection plane. It is

© NCERT not to be republished

seen in a view where the line appears in its true length and the horizontal plane at the same time appears as an edge view. Therefore, true slope of a line is measured from an elevation plane(1) that contains the true length projection of a line. It should be recalled that an elevation plane is any plane that is perpendicular to the horizontal projection plane. Slope of the oblique line AB in fig.2.11 is α^0 up from A or simply α^0 clockwise. This is because point A is more closer to the horizontal plane than point B.

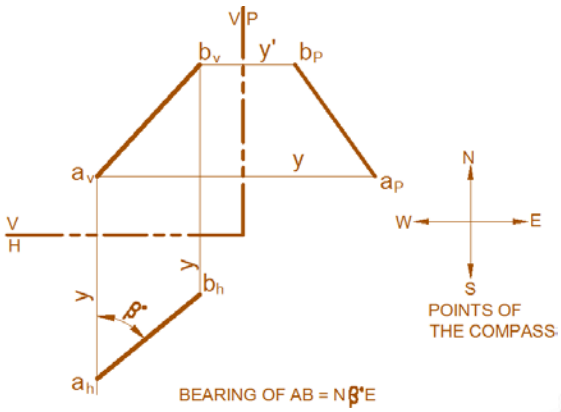

Fig. 2.10 Bearing of a line

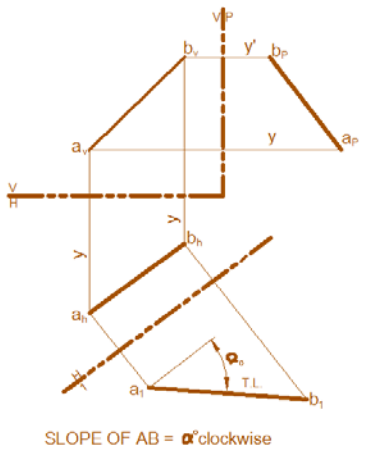

Fig. 2.11 Slope of a line

C. Point Projection (End View) of a Line

1. Can you imagine a line appearing as a point?
2. Hold your pen or pencil and consider it as a line. Then try to coincide the starting and ending point of the line (pen or pencil) from your point of view. Try to see it as a point.

A line can be projected as a point on a projection plane that is perpendicular to the line. When the true length of a line appears on one of the principal planes of projection, only one auxiliary plane perpendicular to the true length of projection is needed to show the lines as a point. However, in the case of an oblique line a secondary auxiliary plane(2) which is perpendicular to the true length view is required. Therefore, a point view of a line always comes after a true length view. Fig. 2.12 shows the point projection of an oblique line AB.

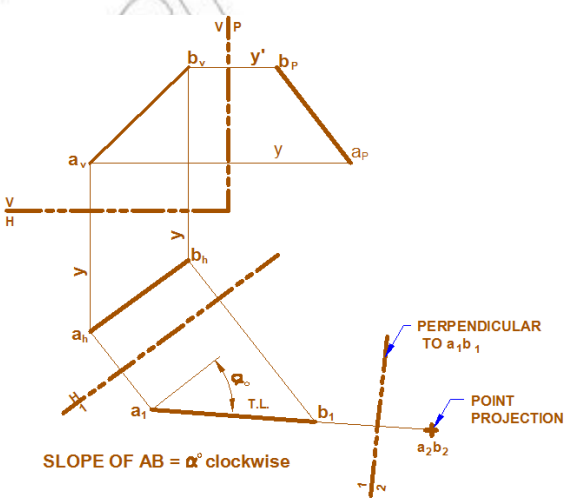

Fig. 2.12 Point projection of a line

Checkpoint 2.2

The vertical and horizontal projection of line MN in space are as shown in the Figure. Trace the given views onto your drawing paper and find:

A. The bearing and true slope of line MN.
B. True length projection of the line, and
C. The point projection of the line.

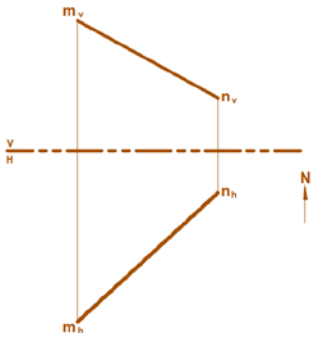

2.2.3. Projection of a plane

1. List down the types of planes you know.
2. Can you define a plane in terms of line?

Theoretically, a plane is considered to be a flat surface with unlimited extent. However, for graphical purposes, planes are bounded with straight line segments. Basically, there are four ways by which planes can be formed or represented:

i) By two intersecting lines in space,
ii) By two parallel lines in space,
iii) By any three non collinear points in space, and
iv) By a line and a point not on the line.

A. Types of plane surfaces:

Plane surfaces may occur in any of the following three positions:

(i) Principal Plane: is a plane surface that is parallel to either of the principal planes of projection, and thus its projection on a plane to which it is parallel will be a normal view. A principal plane parallel to the vertical projection plane is referred as a *vertical plane*. Similarly, a principal plane parallel to the horizontal projection plane is a *horizontal plane* and a plane aligned with the profile projection plane is a *profile pane*. In Fig. 2.13, surface A is a vertical plane, B and C are horizontal planes and surfaces D and E are profile planes.

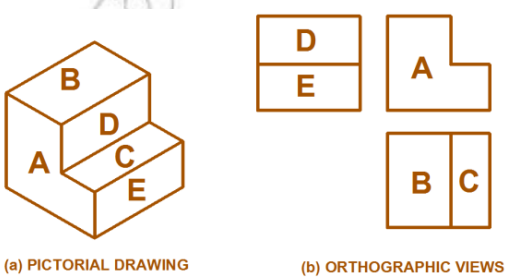

Fig.2.13 Principle surface of an object

(ii) Inclined Plane: It is a surface that is inclined to two of the principal planes but perpendicular to the third principal projection plane. For the object shown in Fig.2.14, the shaded surface F is an inclined plane while all other surfaces are principal planes.

© NCERT not to be republished

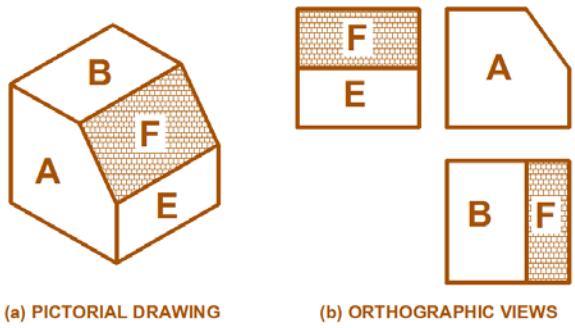

Fig. 2. 14 Inclined surface of an object

(iii) Oblique or Skew Plane: It is a plane surface that is inclined to all the three principal planes of projection. The shaded surface G in fig. 2.15 represents an oblique surface.

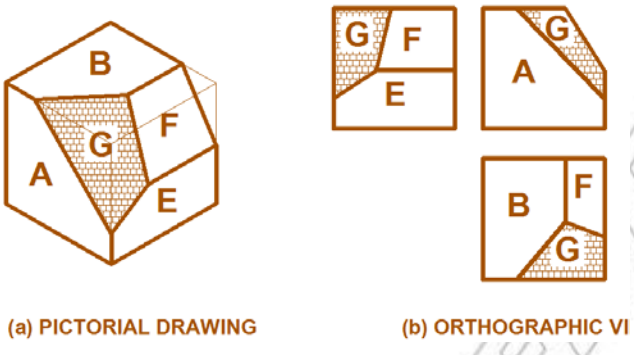

Fig. 2. 15 Oblique surface of an object

Checkpoint 2.3

The object shown in the Figure contains different types of plane surfaces. Identify the type for each labeled surface as vertical, horizontal, profile, inclined or oblique planes.

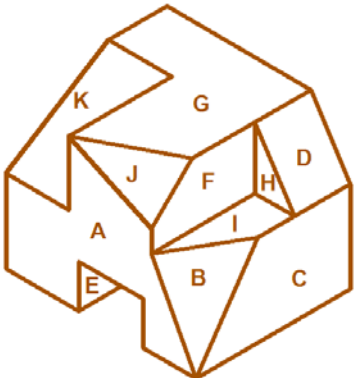

B. Principal Projections of a Plane

Views of a plane in space can be obtained by projecting the vertices of the plane on various projection planes. Fig. 2.16 shows the principal projections of an oblique plan ABC in space.

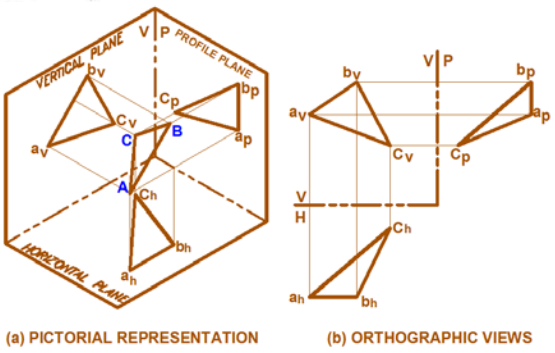

Fig. 2.16 Principal projections of a plan

© MoE First Revision Not to be republished

C. Edge View of a Plane

Can you imagine a plane appearing as an edge or a line?

Hold a paper or one of your set square and try to coincide the edges of the plane (paper or set square) on a single line from your point of view. Did you visualize it as an edge? Any plane in space can be projected at most as a true shape or at least as edge view. When a plane is vertical, its edge view will be seen from above on the top view. If it is a horizontal plane, it will appear as an edge on all elevation views including the vertical and profile planes. However, if the plane is inclined or oblique to the principal planes, it should be projected on an auxiliary plane that is perpendicular to any one line on the plane.

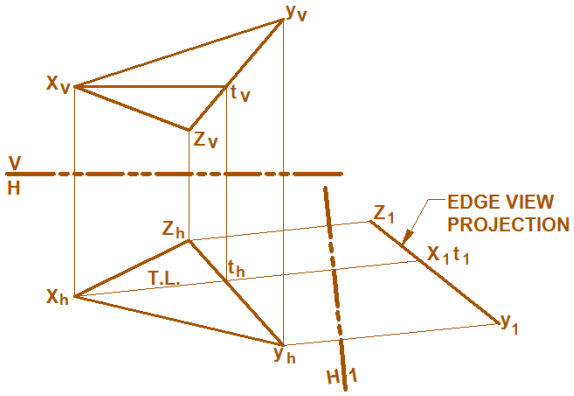

Fig. 2.17 Edge view of an oblique plane

To simplify the steps required to find the edge view, the arbitrary line that falls on the plane can deliberately be selected as a horizontal line. Thus, the projection of this line on the vertical plane (front view) is parallel to reference line V/H and its top view will be a true length projection. For the oblique plane XYZ shown in Fig. 2.17, line XT is a horizontal line. The auxiliary elevation plane (1) perpendicular to $x_h t_h$ is thus a projection plane perpendicular to plane XYZ and gives its edge view. In general, the steps to be followed to obtain the edge view of an oblique plane XYZ in space from two given principal views are as follows:

i. Construct the projection of a horizontal line XT that falls on the given plane, the front view of this $x_v t_v$ should be parallel to reference line V/H.
ii. Project line XT on the horizontal plane. Its top view $x_h t_h$ is a true length projection.
iii. Setup an auxiliary plane (1) perpendicular to $x_h t_h$
iv. Project points X, Y and Z onto auxiliary plane (1). The projection $x_1y_1z_1$ will be a straight line, representing the edge view of plane XYZ.

D) Normal (True Shape) View of Plane

Normal view of a given plane in space is the view that gives the actual size and shape of the plane. To find the true size and shape projection of an oblique plane, it is necessary to setup an auxiliary plane parallel to the given plane. General procedures used to find the true shape projection of plane are the following: (Ref. Fig. 2.18)

© MoE Ethiopia Not to be republished

(i) First, find the edge view of the given plane.

(ii) Setup an auxiliary projection plane (2) parallel to the edge view of the given plane.

(iii) Project the edge view of the plane onto the parallel projection plane (2). Since all edges of the plane are at equal distance from plane (2), every side of the plane will be projected in true length and in effect the plane is shown in its true size and shape.

In Fig. 2.18, the vertical and horizontal projections of an oblique plane KLM are given. The true shape projection of the plane is then shown on auxiliary plane (2).

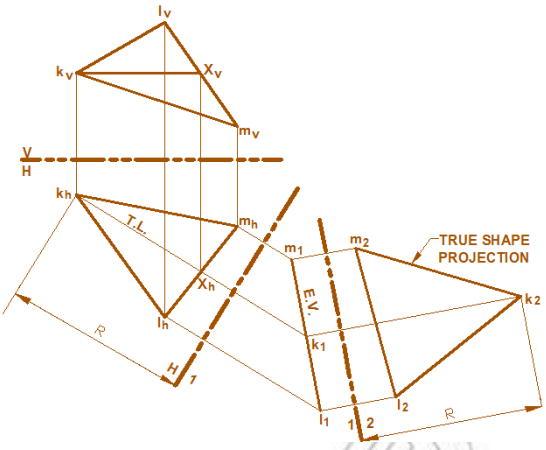

Fig. 2.18 Normal view of an oblique plane

Checkpoint 2.4

Vertical and horizontal projections of planes DEF in space are shown in the figure below. Trace these views on to your drawing paper to full scale and find the true shape projection of the plane.

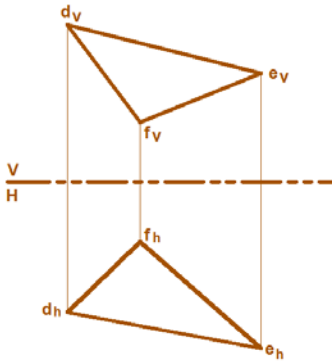

GIVEN VIEWS

2.3 Auxiliary Projection of Objects

2.3.1 Auxiliary Plane

How do you think is possible to project the true shape of an inclined plane found on an object?

Relate the principal planes and auxiliary plane, specially their orientation with respect to the basic principal planes. Look at the Fig.2.19 that shows an object projected onto all six of the major orthographic planes. As you can see, every side of the object in the diagram is parallel to one of the six planes. Because of this, the shape that is projected

© MoE DRG Not to be republished

onto each plane is the same as the actual shape of the side of the object. For example, the L-shape projected onto the vertical plane (VP) mirrors exactly the shape of that side of the object. Whenever this is the case, we say that the orthographic drawing shows the *true shape* of the object.

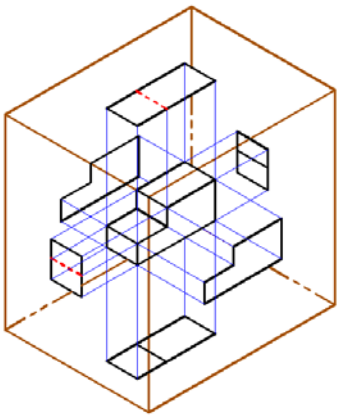

Fig. 2.19 The six principal projection of an object

Similarly, going back to the same diagram, you can see that the lengths of the lines projected to the orthographic planes are the same lengths that are found on the original object. When this is the case, we say that the orthographic drawing shows *true lengths*. Again, we get true lengths when the sides of the object are parallel to the orthographic planes.

However, there are many objects containing sides that are not parallel to the orthographic planes. Here are some examples as shown in Fig.2.20:

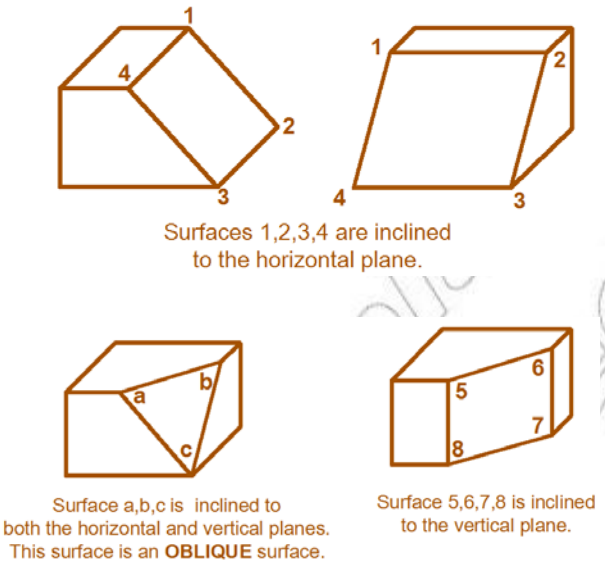

Fig. 2.20 An Object With Inclined And Oblique Surface

When we draw orthographic projections of these and similar objects, we can end up with shapes and lengths that are not the true ones (typically they are shorter). In the remainder of this unit, we'll focus on the technique for getting around this problem. This technique involves drawing what are known as auxiliary views to get at true shapes and lengths onto auxiliary projection plane parallel to the inclined or oblique surfaces.

The method of projecting the image of an object to an auxiliary plane is identical to the method used for projecting an image to one of the principal planes; that is, the projectors are parallel and the observer is positioned at an infinite distance away from the object.

© MoE EDR Etty Not to be reproduced

2.3.2 Construction of Auxiliary Views

As we have just learned, there are times when we cannot completely describe an object using the six major planes. This is especially true when the object or part of it is inclined or at an oblique angle to the major planes. In this case, we create a special orthographic view called an auxiliary view.

In this section, you'll learn how to create auxiliary views. Auxiliary views are very useful when you want to make certain details clearer or you want to show the true shape of surfaces which are not perpendicular or parallel to the major planes.

However, it is possible to add an auxiliary view to a drawing of even a simple object. Let's follow the steps mentioned in table below, just to learn how to draw auxiliary views.

Step	Action
1	Draw two adjacent principal views, one of which must show the inclined surface as an edge.
2	Light draw a reference line (AB) parallel to the edge of the inclined plane.
3	Light draw a reference line (CD) between the two principal views. Use AB and CD to locate points in the auxiliary view.
4	Draw projectors from the inclined edge rotating reference line AB parallel with the inclined surface. These projectors are perpendicular to the inclined edge and the reference line as shown in Fig2.21.
5	Using a compass or dividers, transfer distances from reference line CD to the various points in the side view.
6	Darken all object outlines of the primary view and erase all projectors and reference lines. The completed primary auxiliary view shows the true shape of the inclined surface.

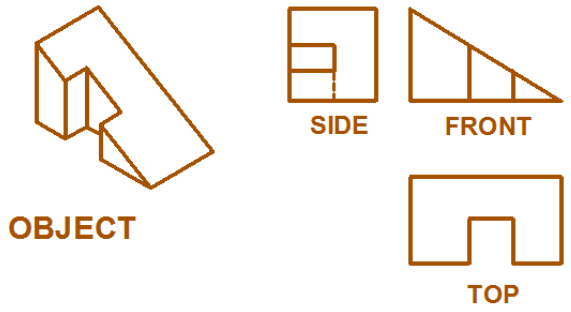

STEP 1

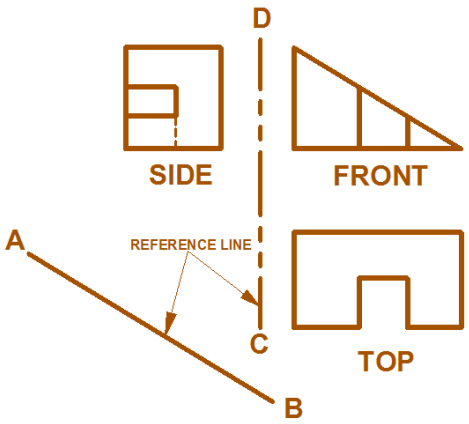

STEP 2 & 3

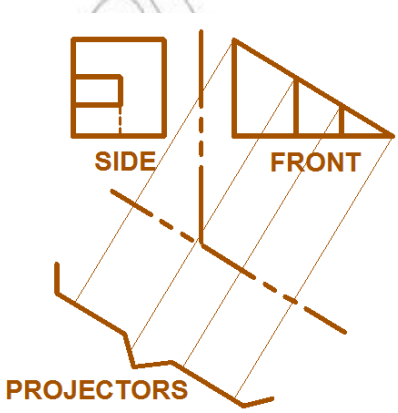

STEP 4

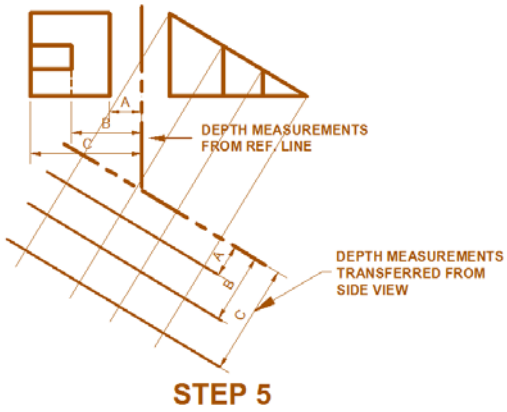

Fig 2.21 Drawing an auxiliary view.

Activity 2.2

1. How many auxiliary planes did you use to find the point view of a line or edge view of a plane?
2. Name them in your own convention of naming.

2.4 Types of Auxiliary Views

Auxiliary views are classified according to the position of planes in relation to the principal planes.

2.4.1 Primary Auxiliary Views

When an auxiliary plane is inclined to four of the six major planes of projection and is square with the other two, the view we obtain is called a primary auxiliary view. So far in this unit, all of the auxiliary views we've seen are primary auxiliary views.

Naturally an auxiliary plane will be making angles with two principal planes which will be different from 90^0 but it will still make 90^0 with the third. The auxiliary view is named after the view on the third plane; so there are three types of primary auxiliary views:

i. front,
ii. top and
iii. side auxiliary view.

The drawings below show examples of these three primary auxiliary views, given an object with an inclined face.

i. Front Auxiliary

Fig 2.22 shows that when we start our projection from the front, we get an auxiliary elevation. We started our projection from the front because the front contains the edge view of the inclined face. An edge view shows true length.

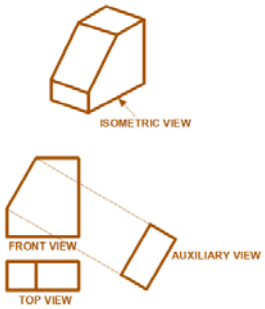

Fig. 2.22 Front Auxiliary View

© MoEDR Ethiopia Not to be published

ii. Top Auxiliary

In fig. 2.23 the edge view of the inclined face is shown on the top view. So we start our projection from the top and get top auxiliary view.

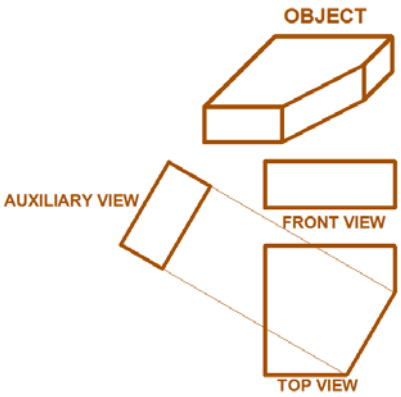

Fig. 2.23 Top Auxiliary View

iii. Side Auxiliary

In the fig 2.24, the edge view of the inclined face is shown on the right side view. So we start our projections from this view.

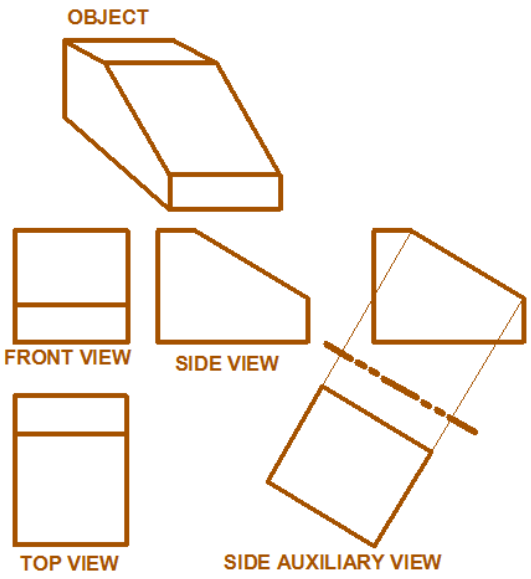

Fig. 2.24 The Side Auxiliary View

2.4.2 Secondary Auxiliary View

Sometimes an object has a face inclined to all six major orthographic planes. When this is so, we must first draw a primary auxiliary view to obtain an edge view of the inclined face, and then a secondary auxiliary view to show its true shape. In such a drawing, the primary auxiliary view, or edge view, also provides the surface's true angle of inclination to the horizontal or vertical plane. (That is, from an edge view you can measure these angles). Following are an example that utilise edge and secondary auxiliary views.

Example: Given the object below, draw an orthographic projection that shows the true shape of surface abc.

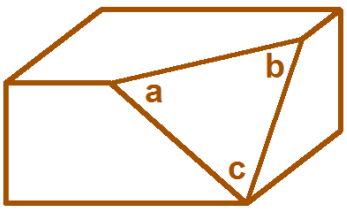

1. Draw the top and front view of the object
2. Begin drawing the edge view of the oblique surface: project construction lines from the top view and draw a V1/H1 reference line.
3. Complete the edge view: with a compass, transfer points a, b and c from the top view to the auxiliary view. The straight line that results is the edge view of surface abc.

4. Draw the secondary auxiliary view: project perpendicular construction lines from the edge view and draw a reference line V2/H2 at a convenient position. Then transfer points from the plan to the new plan by taking measurements from the V1/H1 line and marking the equivalent distance from the V2/H2 line. The new plan is a partial secondary auxiliary view that shows the true shape of surface abc.

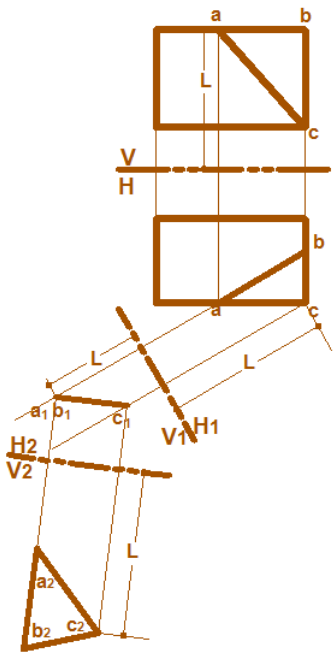

Checkpoint 2.5

The leveled planes shown in the views given by the figure below represents oblique surfaces on the respective objects. Find the secondary auxiliary views of these surfaces

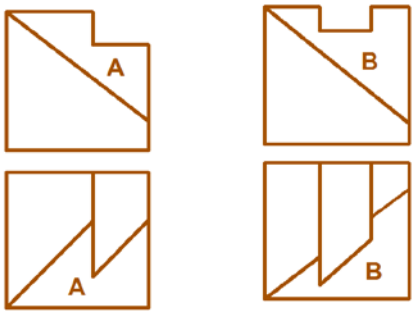

2.4.3 Other Features in Auxiliary

Partial and Complete Auxiliary Views

As mentioned previously, one of the major purposes of an auxiliary view is to show the true shape of a surface that is not parallel or perpendicular to the major planes. However, in some cases a complete auxiliary view is a distorted view of an object, making it of little value. In such cases, we use what is called a partial auxiliary view.

A partial auxiliary view is just what it sounds like: an auxiliary view of part of an object. For example, we often use a partial auxiliary view to show an irregular inclined face of a component. If we used a complete auxiliary view of such a component, the part of the view other than the inclined face would be

© MoE FDRE Not to be republished

distorted. In general, we use partial auxiliary views to show true shapes of inclined and oblique surfaces.

For example, in Fig.2.25 (a) is a drawing of an object showing two of the major orthographic planes.

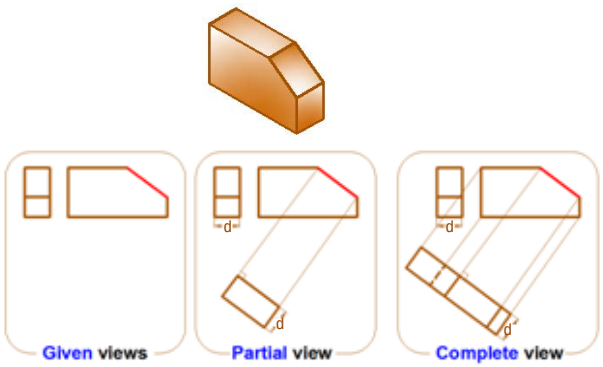

Fig. 2.25 Partial and complete view of an object

However, none of the two views shows the true shape of surface ABCD. (This is true of the other three orthographic views as well). The problem is that surface ABCD is inclined to a major orthographic plane.

Instead, to see the true shape of surface ABCD, we must draw an auxiliary view. We'll draw this view by positioning ourselves in such a way that we look at the surface directly from its front (this is our line of site). This auxiliary view is shown Fig.2.25 (b).

Notice that the above auxiliary view only shows the surface ABCD and not the whole view. This makes it a partial auxiliary view. If we drew the whole object, the rest would be distorted as shown in Fig.2.25 (c).

Checkpoint 2.6

For the objects shown in figure below, make the partial and complete auxiliary view of the inclined surface.

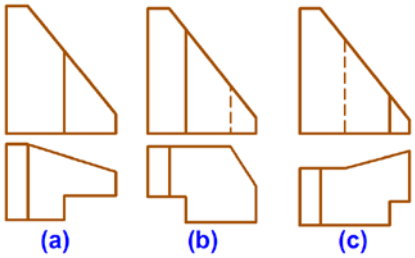

Circular Features in Auxiliary Views

Circular features in auxiliary projection appear elliptical, not circular. The most com monly used method to draw the true shape of the curved surface is the plotting of a series of points on the line. The more points are plotted on the line, the accuracy of the curve or circular feature is better. The easiest way to explain this method of auxiliary projection is the projection of a truncated cylinder. This shape seen in the auxiliary projection is an ellipse, as shown in Fig.2.26.

© NCERT not to be republished

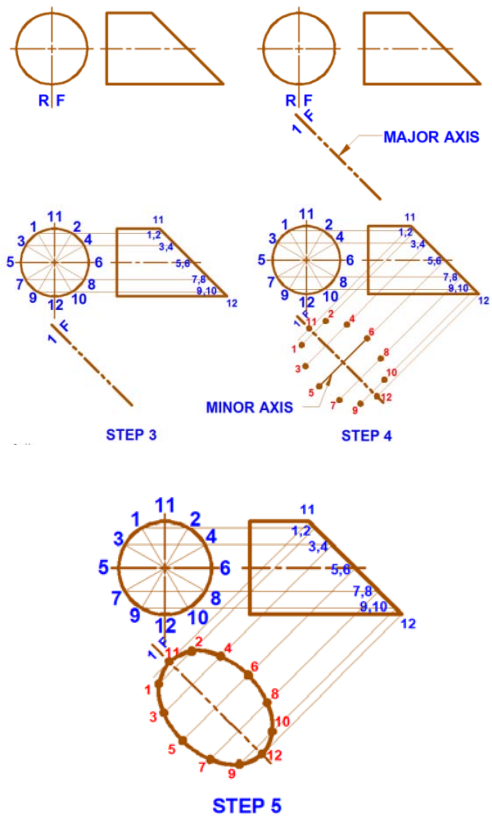

Fig. 2. 26 Projection of circular features in auxiliary view

The approach to projection of a circular shape is explained below.

1. Draw the front and side view of the turnicated cylinder.
2. Center line (F/1) of the auxiliary view is drawn parallel to the edge line.
3. The parameter of the circle in the side view needs to be divided into equal slices or equally spaced points. Our example is divided in 12 equally spaced points, 30° apart. The circumference of the circle (360°) is divided in 12 equal spaces, 360°/12=30°. These points are then projected to the edge line on the front view.
4. Then these points are a projected at right angles toward and past the center line of the auxiliary view. And the widths between the center line and individual points taken from the side view are transferred to the auxiliary view.
5. When all the widths have been transferred from the front view to the auxiliary view, the resulting points of intersection are connected to give the preferred elliptical shape.

Checkpoint 2.7

The object represented in figure below, have circular features on their inclined surfaces. Find the partial auxiliary views of the objects on projection plane parallel to the inclined surface.

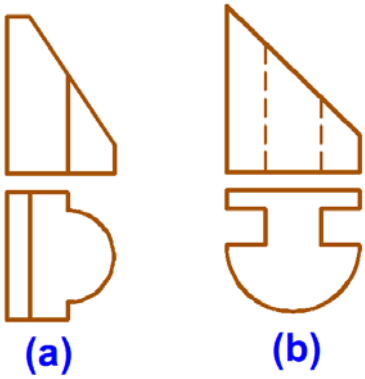

© MOE FDR Ethiopia Not to be published

Half Auxiliary View

Complete view representations of symmetrical objects are not usually recommended in practical drawings. That, if a principal or auxiliary view of an object is symmetrical about a given line, only a half view representation may be drawn to save both space requirement and essential drafting time. In Fig. 2.27, half view representations of the top and partial auxiliary views of a bended pipe flange are used to accurately describe its shape and size.

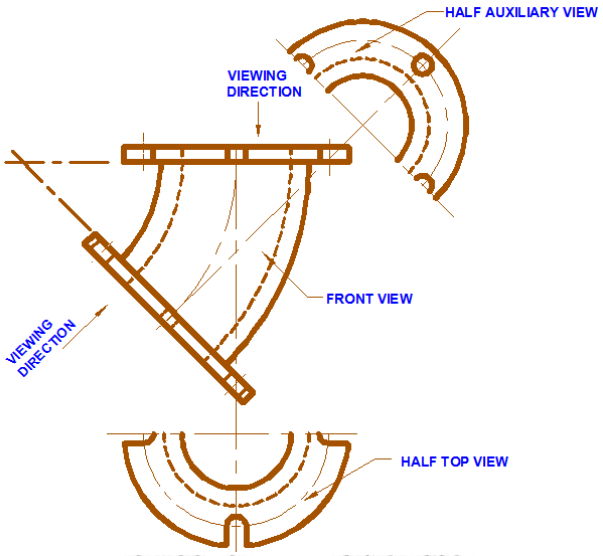

Fig. 2.27 Half view representation of a symmetrical object

Key terms

- ***Principal planes:*** surfaces those are horizontal and vertical.
- ***Reference line:*** a line from which angular or linear measurements are reckoned. Also known as datum line.
- ***True length:*** The actual length of any given line or surface. Sometimes the true shapes of surfaces on a 3D object are not obvious on a 2D drawing.

© DDR Edit Not to be republi

Unit Summary

When a surface of an object is not parallel to one of the three principal views, an auxiliary view may be used to obtain the true size of the surface. An auxiliary view is usually only a partial view showing the desired features.

An auxiliary view should be positioned close to the principal view so that both views can be read together. A centre line represents the axis of symmetry. Projectors are usually drawn at 90 degrees to the inclined surface. Measurements from one view are projected across to the auxiliary view. Auxiliary views may be projected from any of the three principle views.

A primary auxiliary view is projected onto a plane that is perpendicular to one of the principal planes of projection and is inclined to the other two. A secondary auxiliary view is projected from a primary auxiliary view into a plane that is inclined to all three principal projection planes.

Generally, auxiliary views are used to show the true shape or true angle of features that appear distorted in the regular views. Basically, auxiliary views have the following four uses:

- True length of line
- Point view of line
- Edge view of plane
- True size of plane

To draw an auxiliary view of a curved surface a number of random points on the curve in one of the principle views must be taken. These data points can then be projected into the auxiliary view. Sometimes it is required to draw an auxiliary view first from one principal view before being able to obtain another complete principle view. Auxiliary views are also used to find the lines of intersection of surfaces.

© Not to

Exercise

EXERCISE I. Draw the principal and partial auxiliary views

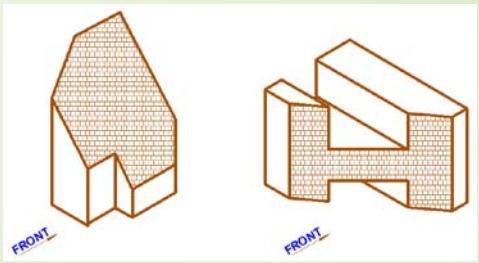

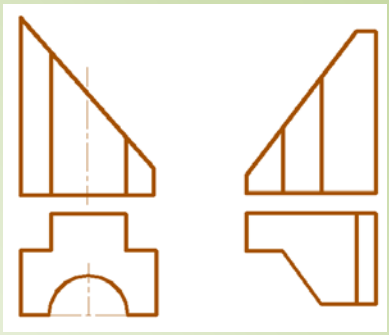

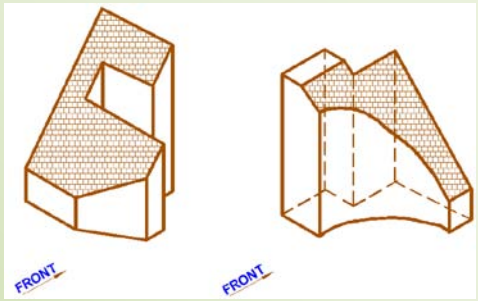

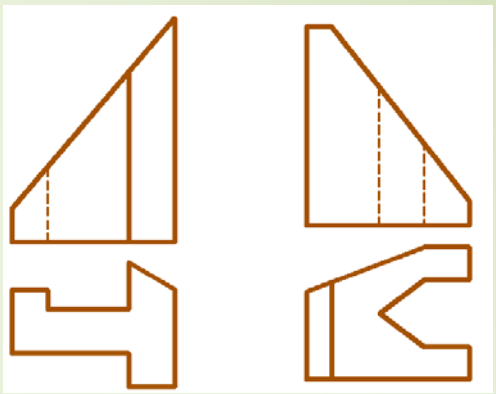

EXERCISE II: Draw partial auxiliary

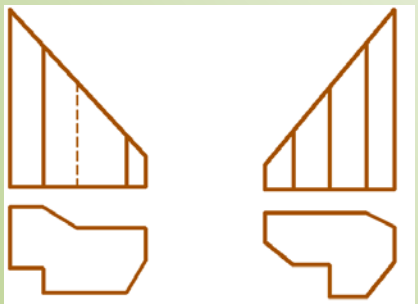

EXERCISE III: Draw complete auxiliary

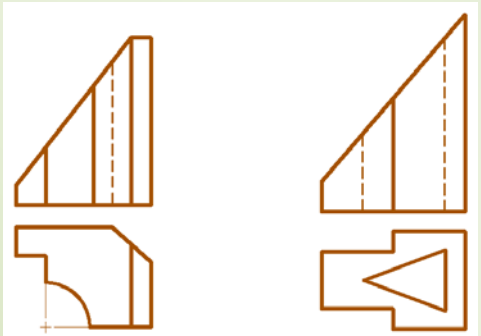

Project:

I. Draw the principal views and the partial auxiliary view of the inclined surface of the given objects.

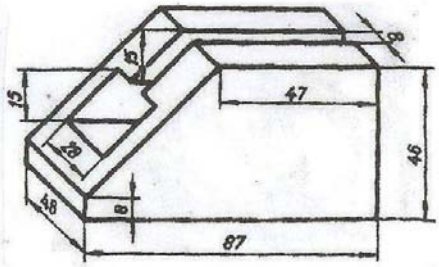

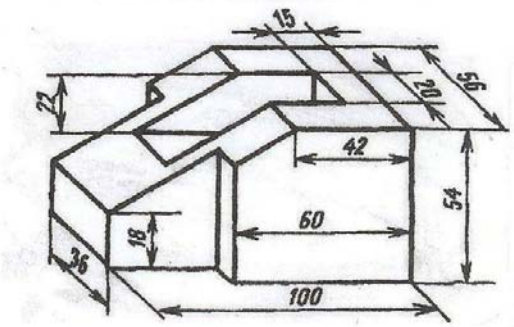

II. Draw partial and complete primary auxiliary views of the object shown below. Transfer the dimension from the given views.

1.

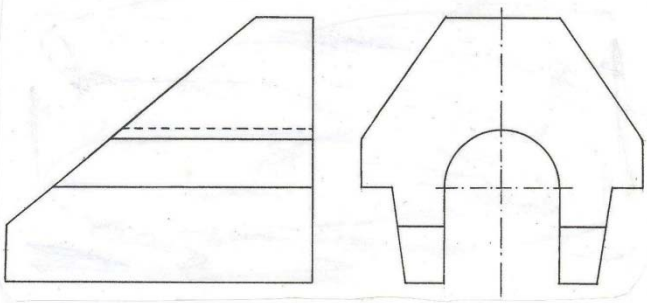

2.

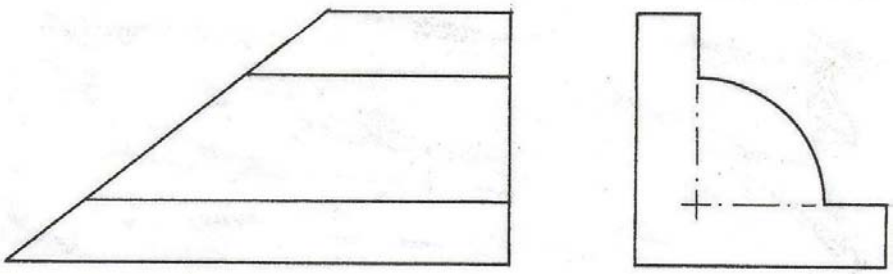

3.

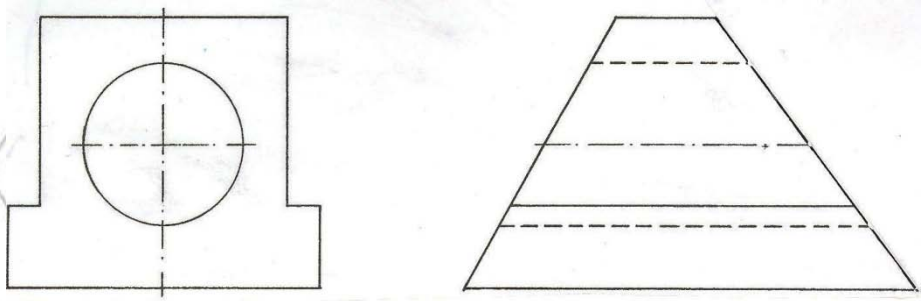

© Not to be republished

UNIT 3

SECTIONAL VIEW

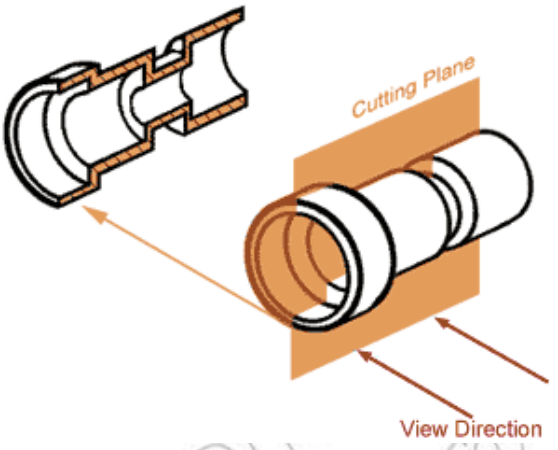

Learning Competencies:

Up on completion of this chapter you should be able to:

- **Define the concept and the use of sectional views;**
- **Describe and select the location of cutting plane to create sectional view;**
- **Identify and make different types of section lining;**
- **Visualize the sectional view of an object;**
- **Identify the types of sectional views;**
- **Compare and contrast the advantage of all types of sectional views;**
- **Select the appropriate type of section to the given object;**
- **Perform the sectional view of an object with preferable type of section.**

© Not Published

3.1 Introduction

- Have you ever cut an orange with a knife? Did you observed the internal part of it? What are the reasons we need to see the interior part of an object?

The basic method of representing parts for designs by views, or projections, has been explained in grade 11 (chapter 6) . However, we are frequently confronted with the necessity of showing more or less complicated interiors of parts that cannot be shown clearly by means of hidden lines. We accomplish this by slicing through the part as one would cut through an apple or a melon. In such cases, imaginary cutting planes are made to pass through objects exposing their interior features. The revealed view of the object is then drawn with the conventions of orthographic projection and it is called ***sectional view***.

When a cutting plane reveals the object lengthwise, the section obtained is known as longitudinal section; and when it is done crosswise it is called cross-section. The surfaces of the object which the imaginary cutting plane touches will be represented by hatches. The hatches may vary according to the material made of.

The figure below shows how a sectional view is made and the difference between the orthographic and the sectional view.

If you observe in Fig.3.2 **c** it is hard to visualize the interior details of the object due to the hidden lines. Whereas on the other hand which is the sectional view (Fig.3.2 **a**) provides a visual clarity to the object.

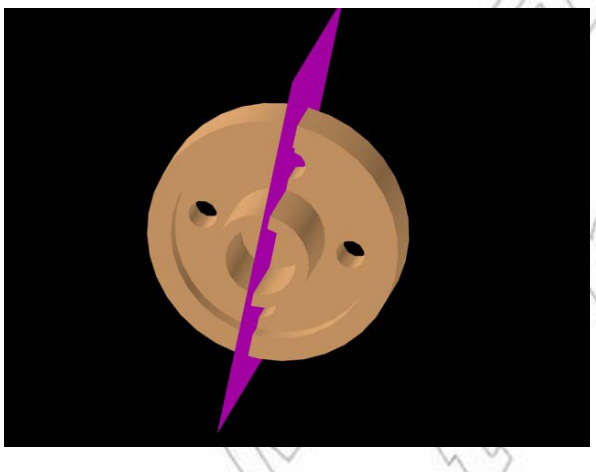

(Before revealing)

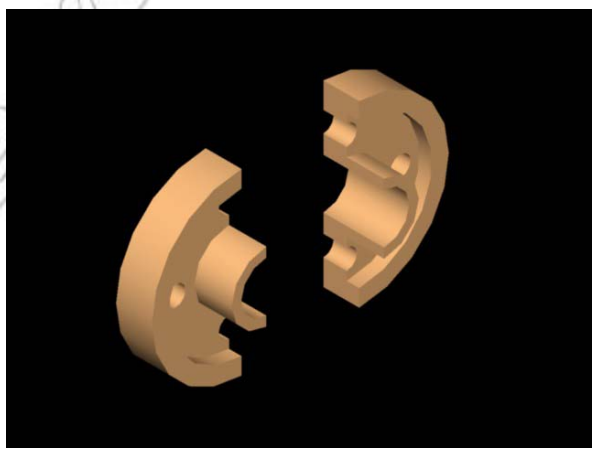

(After revealing)

Fig. 3.1 Section in a 3d view

© ETDR Ethiopia Not to be republished

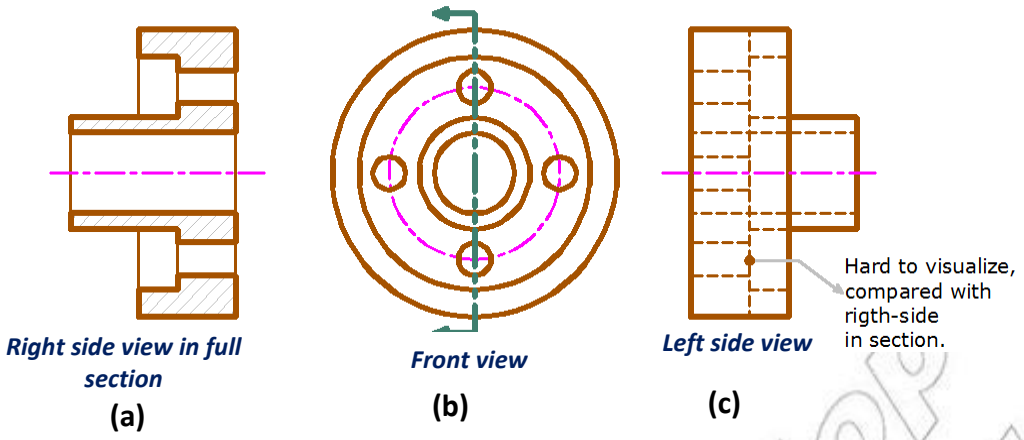

Fig .3.2 Sectional view and its relation with orthographic projection

3.2 Cutting Plane and Section Lining

Activity 3.1

1. Can you imagine a cube having a hole in the center? Sketch it.
2. Imagine the cube cut at the middle like that of an orange. Try to sketch the revealed cube by ignoring one of its part.

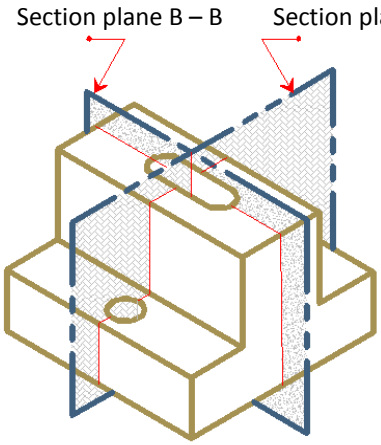

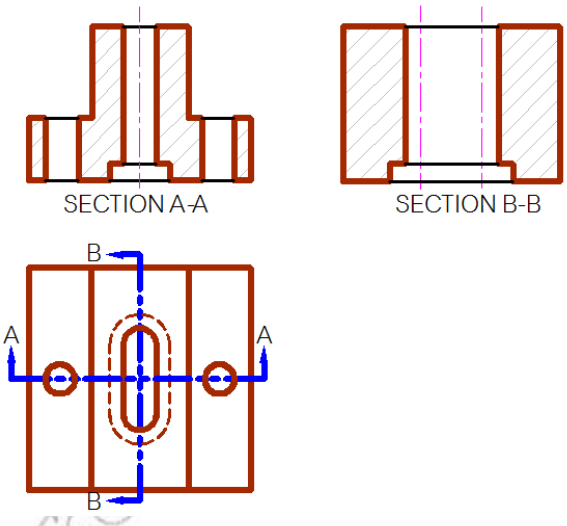

Fig. 3.3 Cutting planes and sections

Cutting Plane: The cutting plane is indicated in a view adjacent to the sectional view, Fig 3.3. In this view, the cutting plane appears edgewise or as a line, called the cutting plane line. A cutting plane line is represented either by a line pattern composed of alternate long dashes and a pair of short dashes or equal short dashes. And such lines should be made with a well sharpened medium thick pencil like an H or

© NCTB FDR Not to be republished

a 2H. Cutting plane lines are drawn having a heavy weight with arrow heads which indicates the viewing direction. At the end of the arrows upper case letters may be attached in order to give reference to the section made. This is especially necessary when we use more than one cutting planes.

Fig. 3.4 shows symbolic line types that can be used to represent a cutting plane line.

a) Straight cutting plane line cutting plane is short)

b) Straight cutting plane line (used when cutting plane is long)

c) Offset cutting plane

Fig. 3.4 Cutting plane lines

Section Lining: section lines are light thin lines, usually drawn as a 45 degree inclined line in case of general purpose. These lines are represented on the surface of the object which the cutting plane have direct contact. The crosshatched surfaces of the object were represented as a hidden line but now as a visible surface. Symbolic section lining may be used in assembly drawings in cases where it is desirable to distinguish the different materials used. Section lining symbols for representation of some commonly used engineering materials are shown in the figure below.

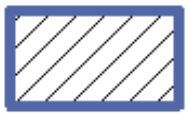

Cast or malleable iron and general use for all materials

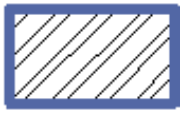

Steel

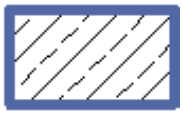

Bronze, Brass, Copper, and compositions

White metal, Zinc, Lead, Babbitt, Alloys

Magnesium, Aluminum and Aluminum alloys

Cork, felt, fabric, leather, and fiber

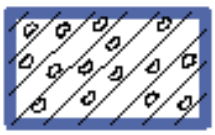

Sound insulation

© NIOS Not to be republished

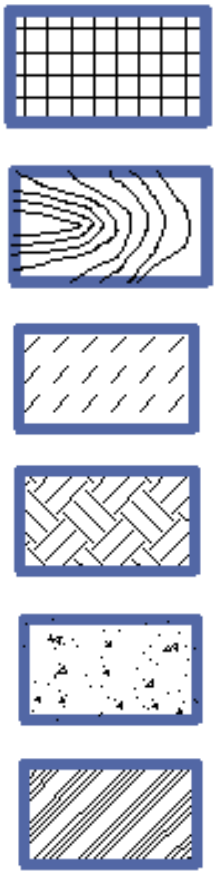

Fig. 3.5 Symbols of materials in section

The correct and incorrect practices of section linings are represented in the figure below.

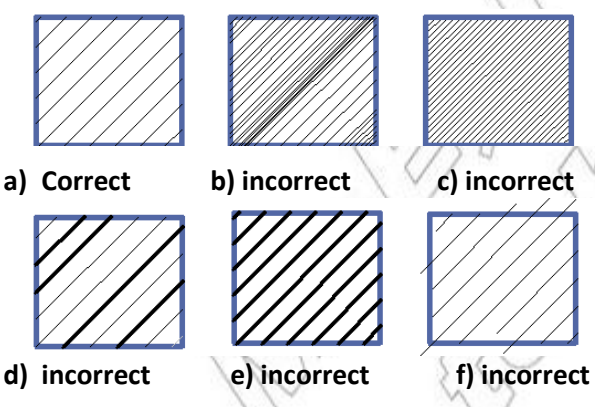

Fig. 3.6 Correct and incorrect practices of section linings

The direction of section lines are illustrated in the figure below.

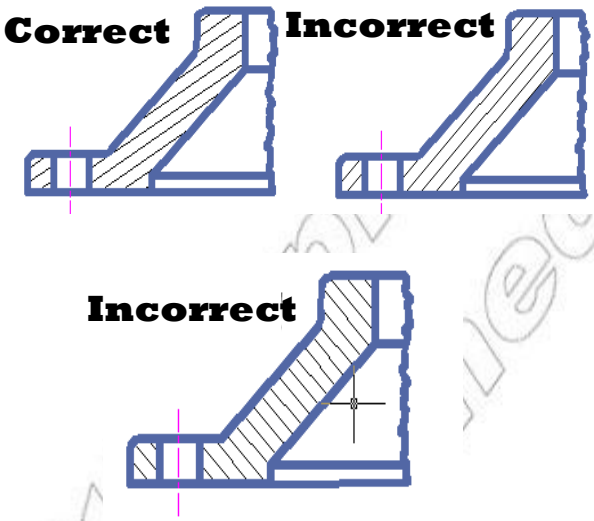

Fig. 3.7 Direction of section lines

3.3 Visualizing a Sectional View

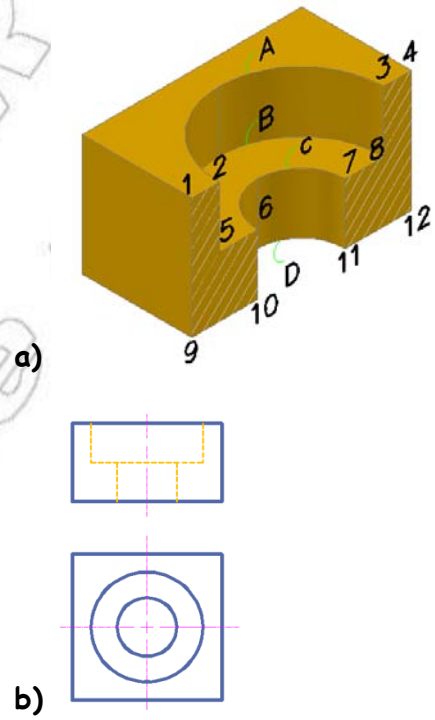

© IDR Not to be republished

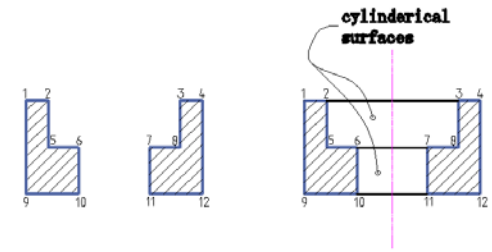

c) d)

Fig 3.8 Visualizing a sectional view

Two views of an object to be sectioned, having a drilled and counter bored hole, are shown in Fig.3.8. The cutting plane is assumed along the horizontal center line in the top view, and the front half of the object (lower half of the top view) is imagined removed. A pictorial drawing of the remaining back half is shown at (a). The two cut surfaces produced by the cutting plane are 1-2-5-6-10-9 and 3-4-12-11-7-8. However, the corresponding section at (C) is incomplete because certain visible lines are missing.

If the section is viewed in the direction of sight, as shown at (b), arcs A,B,C, and D will be visible. As shown at (d), these arcs will appear as straight lines 2-3, 6-7, 5-8, and 10-11. These lines may also be accounted for in other ways. The top and bottom surfaces of the object appear in the section as lines 1-4 and 9-12. The bottom surface of the counter bore appears in the section as line 5-8. Also, the semi cylindrical surfaces for the back half of the counter bore and of the drilled hole will appear as rectangles in the section at 2-3-8-5 and 6-7-11-10.

3.4 Types of Sectional View

Depending on the way and the required details to be shown, sectional views can be classified as follows.

(a) Full sections
(b) Half sections
(c) Offset sections
(d) Broken-out or partial sections
(e) Revolved sections, and
(f) Removed section

3.4.1 Full Sections

The sectional view obtained by passing the cutting plane fully through the object is called a *full section*. The cutting plane appears as a straight line and will never bend. This type of sectional view is mostly used when the expected details to be shown appear:

1. non-symmetrically
2. aligned with a certain axis
3. centrally without other details

In general, the following points should be noted when making full sectional view of an object:

- In making the sectioned view, one half of the object is imagined to be removed
- Invisible lines behind the revealed surfaces are usually omitted
- Visible lines behind the section should be drawn.
- Only the surfaces actually cut by the section plane are crosshatched.

© MoE, FDRE Ethiopia
Not to be republished

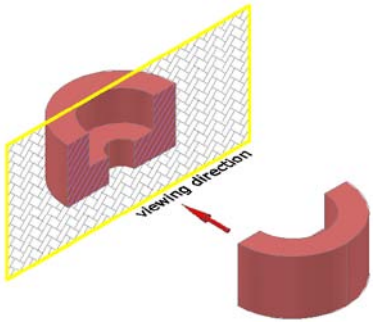

a) Pictorial representation

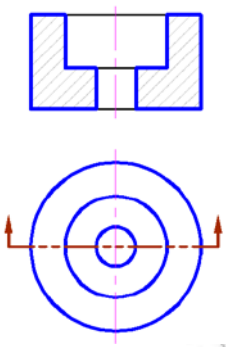

b) Orthographic views

Fig .3.9 Full section

Checkpoint 3.1

The front and top views of the objects are given, redraw them with the same scale and show the front views in full section.

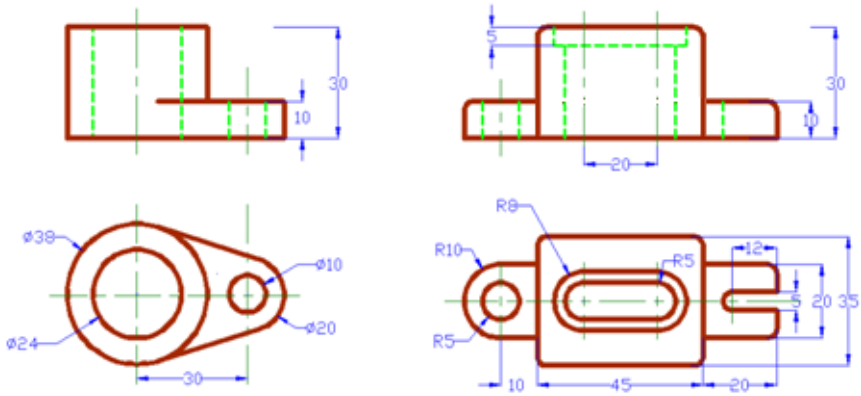

3.4.2 Half Sections

Imagine when one fourth of an orange is revealed and sketch its appearance and show to neighbor friend.

If the cutting plane passes halfway through the object, the result is a *half section*. A half section has the advantage of exposing the interior of one half of the object and retaining the exterior of the other half. Its usefulness is, therefore, largely limited to symmetrical objects. It is not widely used in detail drawings (single parts) because of this limitation of symmetry and also because of difficulties in dimensioning internal shapes that are shown in part in the sectioned half.

In general, the following rules should be noted in making a half-sectioned object:

- One half of the sectioned view should be in section, while the other half remains as an external view.
- Hidden lines will normally be omitted from both sides of the view unless necessary for clearness of interpretation of surfaces.
- Hidden lines may be shown on the unsectioned half, if required for dimensioning purpose.
- The line separating the sectioned half from the external half should be a center line.

a) Pictorial representation *b) One- quarter of the object being removed* *c) Orthographic views*

Fig. 3.10 Half section

Checkpoint 3.2

Front and Top Views of three different objects are given

- **Redraw them to full scale**
- **Project the half section on the front view**

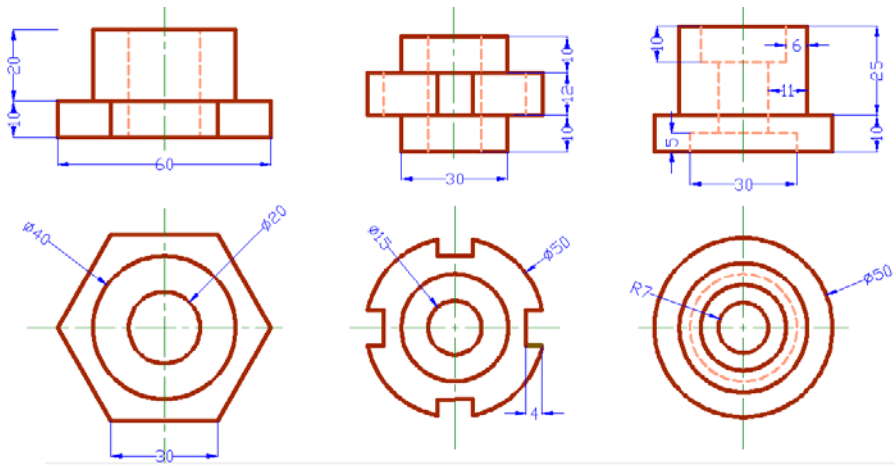

3.4.3 Offset Sections

1. Try to imagine a cube revealed in a path bending more than two parts.
2. Sketch the appearance and show to your teacher.

In sectioning through irregular objects, it is often desirable to show several features that do not lie in a straight line, by "*offsetting*" or "*bending*" the cutting plane. Such section is called an *offset section*. The cutting plane bends orthogonally or uses 90° to bend. The sectional view is drawn as if the interior details are kept aligned in a straight line position. This means we do not show the edges made by the bending of the cutting plane. The figure below illustrates the above mentioned concepts.

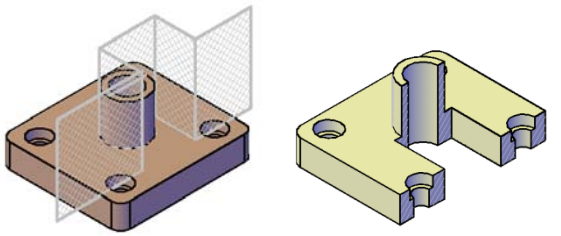

a) Pictorial Representation *b) Interior features being exposed*

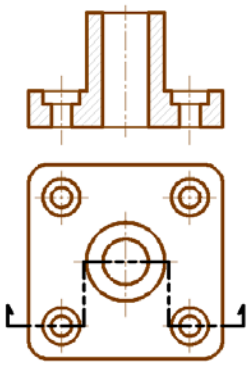

Fig. 3.11 Offset section

Checkpoint 3.3

Redraw the given front and top views on your drawing paper to full scale and choose an appropriate offset cutting plane line on the top view in order to reveal all important interior details in section on the front views.

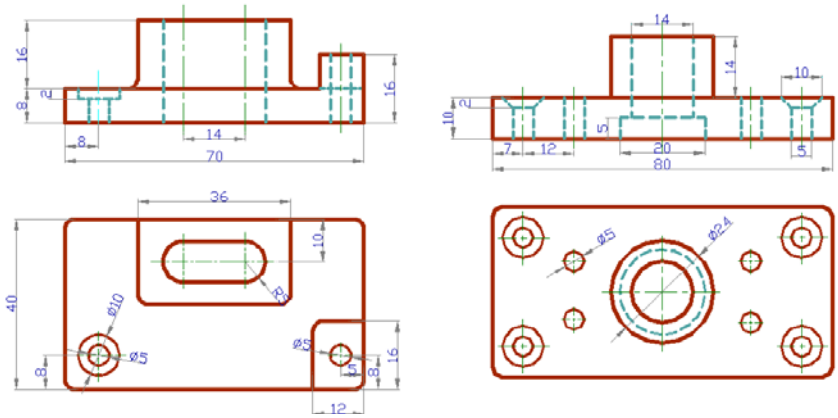

In general, the following points should be carefully observed in offset sections:

- The location of the cutting plane must be shown by the proper symbolic line in the adjacent view.
- Arrows should be placed at the ends of the cutting plane line showing the direction in which the view is made.
- The edges made by the bends of the cutting plane are ignored.

3.4.4 Broken-out (Partial) Sections

Activity 3.2

1. What do you understand from the word broken-out?
2. How do you expect it to be applied in sectional view?

When it is necessary to show only a partial section of a view to expose interior details limited by a break line, is known as *broken-out section*.

Such sections may be used to show only a portion of the interior of an object without losing important exterior features. The object is assumed to be cut by an irregular cutting plane around the portion of the object to be displayed and the front part is removed by breaking it away. The breaking away is represented by an irregular freehand line known as short break line as shown in the figure below.

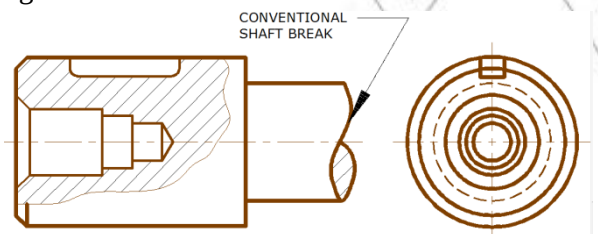

Fig. 3.12 Broken out section

3.4.5 Revolved Sections

1. What is the literal meaning of revolve?
2. How do you expect a revolved section to appear?

The shape of a bar, arm, spoke, or other elongated symmetrical features may be shown in the longitudinal view by means of a *revolved section* (Fig.3.13). The cutting plane in a revolved section is passed perpendicular to the axis of the elongated symmetrical feature and then revolved 90 into the plane of the drawing. It is sometimes important to provide an open space for the section by making a break in the normal view of the object as shown in (Fig 3.13 a). (Fig. 3.13 b) and (Fig. 3.13 c) illustrates some examples of revolved sections.

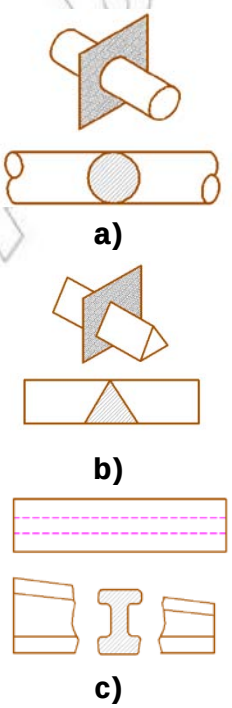

Fig 3.13 Revolved sections showing (a) Solid cylinder, (b) solid triangular prism, and (c) conventional break to show section

© NCERT Not to be republished

Checkpoint 3.4

Front and side views of different elongated objects are as shown in the figure below. Trace the views on your drawing paper to full scale and show the cross-section of each objet at the indicated positions of the cutting plane lines using appropriate revolved section.

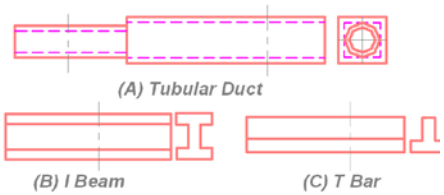

3.4.6 Removed Section

Can you relate removing and sectioning with an example?

Removed sections are similar to revolved sections but are not drawn within the view containing the cutting plane. It is drawn out side the normal view representation. Usually, it is represented by extending the cutting plane line adjacent to the cutting plane. In this case, a center line drawn across the object is used as an axis of rotation to denote where the section is taken. The corresp-onding removed section is then projected along the axis extending from the desired cut position. In here, it is unnecessary to show a cutting plane or to label the sectioned view.

Fig.3.14 shows removed cross-section of a lifting hook.

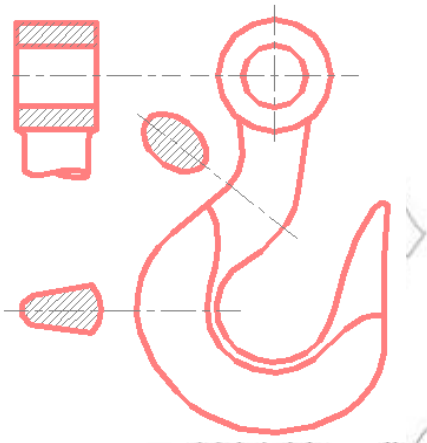

Fig. 3.14 Removed sections of a hook

Generally, removed or detail sections are more useful than revolved sections because of two basic reasons:

- To prevent a principal view of an object of varying cross-section from being cluttered with numerous revolved sections, and
- To enable a removed cross-section to be drawn with an enlarged scale so that additional details can be emphasized and allow adequate space for dimensioning.

In practical drawings, a number of detail sections may be drawn outside the regular view of a complex object. In this case, there should be some means of identifying the position of the cross-section represented. This is usually accomplished by showing the cutting plane on the principal view and labeling both the plane and the resulting view as shown in fig 3.15.

© MoE FDR Ethiopia Not to be reproduced

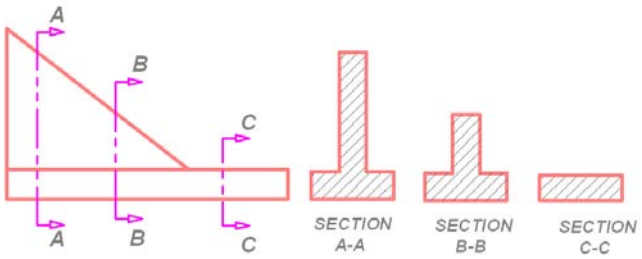

Fig. 3.15 Removed cross section of a shaft

3.5 Other Sectional View Representation

As sectional view is very essential to full describe a design, other sectional view representation also has a part to solve a problem.

3.5.1 Aligned Section

In order to include in a section certain angled elements, the cutting plane may be bent so as to pass through those features. The plane and feature are then imagined to be revolved into the original plane. Fig. 3,16 (b) and (c), shows how the section view appears when the cutting plane and features of the object are rotated into a plane perpendicular to the line of sight.

The angle of revolution or angle through which the cutting plane is bent is always less than 90. To avoid misunderstanding, an aligned section view should never appear foreshortened as in Fi.3.16(a). The location of the cutting plane in aligned section should be shown on the adjacent normal view of the object (Fig. 3.16 (c)).

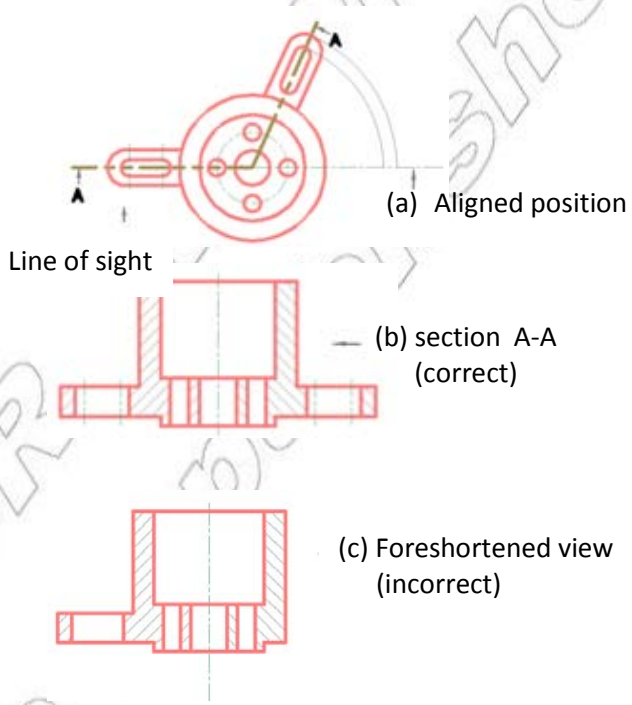

Fig. 3.16 Aligned Section

© MoE, FDRE Not to be Published

Checkpoint 3.5

Front and top views of two objects are as shown in the figure. Redraw the views on your drawing paper to full scale and make an appropriate aligned section of the front views.

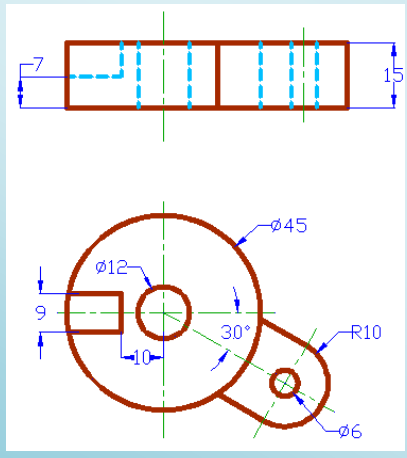

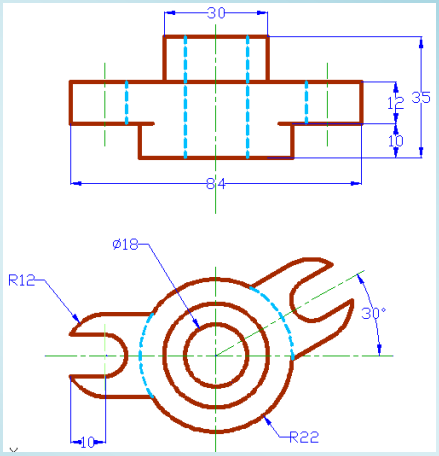

Key terms

- ***Cross hatching***: *i*s a series of thin lines drawn 45° to horizontal. It is used to show the features cut by the cutting plane. Cross hatching makes features stand out on the drawing.
- ***Cutting plane:*** is the surface that is created when a cut is made through a component to reveal the internal features. It can also be called a section plane.
- ***Off-cut***: is the term used to describe the unused portion of material from which an object has been cut.
- ***Part section***: a method of showing internal detail for one small section of a drawing only.

3.5.2 Auxiliary Section

1. How do you think auxiliary and section relate?
2. Form a group and discuss with your friends then present it to the class by representing a group leader.

A sectional view that appears on a plane inclined to any of the principal projection planes is called an *auxiliary section*. The auxiliary section is projected into a position on the drawing so that the line of sight for the view is perpendicular to the cutting plane line. It is used to show the shape of a surface cut by a cutting plane or cross-sectional shape of an arm or a rib inclined to the regular planes. An auxiliary view in section is drawn by the usual methods of auxiliary projections discussed in chapter two. When a

cutting plane cuts an object, as shown in Fig. 3.17, arrows at the ends of the cutting plane line indicates the direction in which the cut surface is viewed.

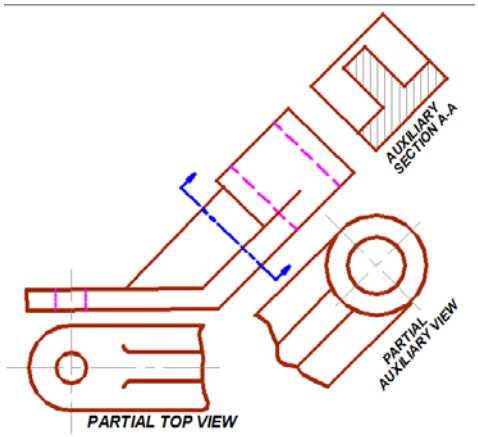

Fig. 3.17 Auxiliary section

3.6 Conventional Representations in Sectioning

Have you ever seen a machine drawing?
Have you seen a machine assembled and functioning?
List the type of machines you ever saw. Imagine the sectional view as it is assembled.

Sometimes, the level of confusion in some sectional view representation can be reduced by violating certain rules of orthographic projection. For example, nothing could be gained by showing the solid interior of some parts like shaft, bars, bolts, nuts and screws, It is therefore a customary practice to assume that such parts are not cut by a cutting plane that may pass through the parts. In this practice, not only the considerable time and effort required to crosshatch these areas is saved but also the representation of an object or assembly will be more clear and easy to understand. Fig.3.18 illustrates conventional representation of these parts in section.

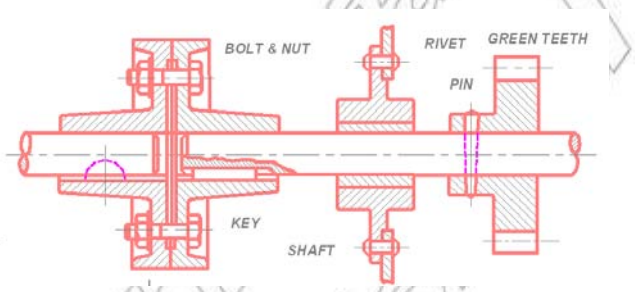

Fig .3.18 Solid shafts, bolts, screws, nuts, etc in section

Some solid features of certain parts like spokes of a wheel are not sectioned, even though the cutting plane passes through them. Such representation is used to distinguish a wheel with spokes from a wheel with thin plate or web. Fig. 3.19 illustrates the general practice in sectional representation of a wheel with spokes and with plate.

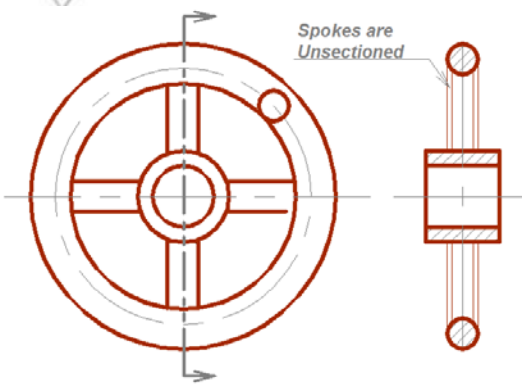

(a) Wheel with spokes

© NCERT not to be republished

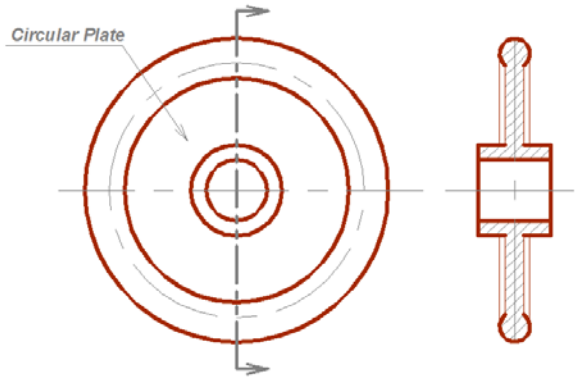

(b) Wheel with spokes

Fig. 3.19 Wheel with spokes and wheel with plate

When the cutting plane passes through the center of a rib length, web, spoke, or other relatively thin element, the section lining is omitted to avoid a false impression of thickness and solidarity (Fig.3.20). However, if the cutting plane passes crosswise through those thin elements, the features are crosshatched as usual.

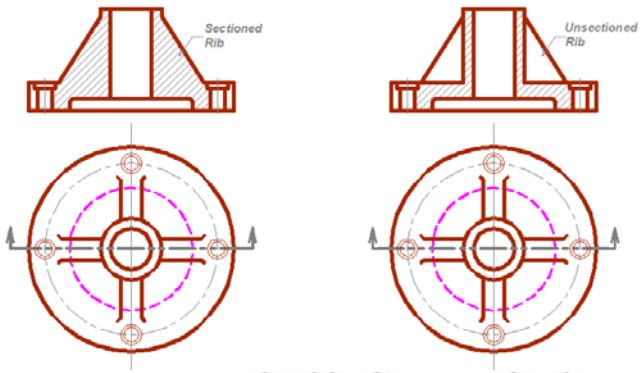

(a) Incorrect Practice *(B) Correct Practice*

Fig. 3.20 Ribs in section

When there are an odd number of holes, ribs or spokes, which are symmetrically arranged around a cylindrical object, conventional revolutions are used to make section views clear and avoid confusion in interpretation.

These features may not project orthographically to the section view, but the convention allows for this practice and it is accepted as standard. Therefore, these parts are assumed to be rotated until aligned with the section plane axis as illustrated in Fig. 3.21. It is usually used for both sectioned and unsectioned view representation of objects with odd numbered features.

© MoE-FDR Ethiopia Not to be republished

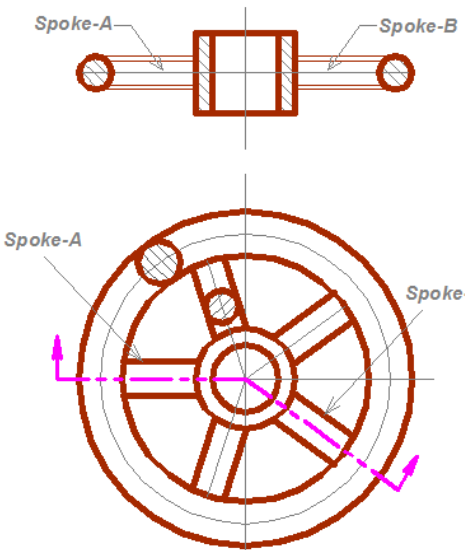

a) Symmetry of spokes of wheel

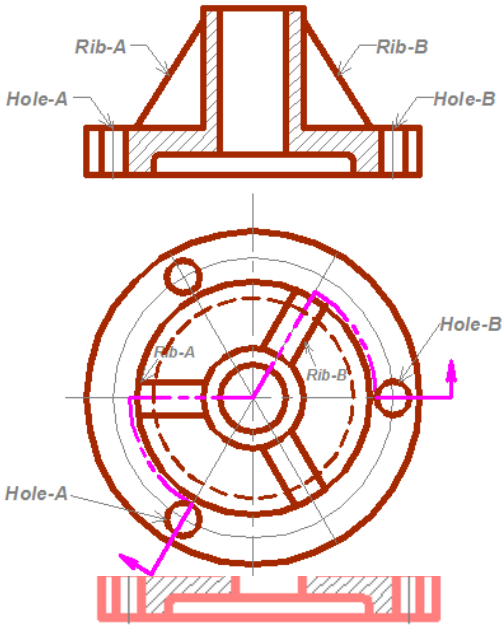

b) Symmetry of Holes

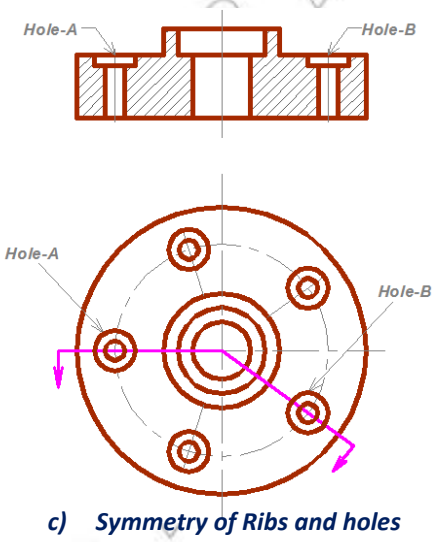

c) Symmetry of Ribs and holes

Fig .3.21 Symmetry of spokes of wheel, ribs and holes

© MoE Not to be republished

Unit summary

Interior features of an object can be described with the use of hidden lines. This can be become confusing however. The use of sectional views simplifies the representation of internal features. In a sectional view we imagine the object is cut by a plane to reveal the interior features.

Longitudinal sections cut the object lengthwise. Cross section cuts the object crosswise. A full section cuts the object in half. Section lines represent where the surface was cut. The cutting plane must also be described in another view. A half section cuts the object in a quarter. A half sectional view shows the interior and exterior of the object.

The cutting plane can be offset to show desired features. A broken section (Partial section) can also be used to give greater description of an object.

Revolved and removed sections are used to eliminate the need of a separate view. Line technique is important: contrast, spacing, inclination.

© MoE, FI... Not to be re...ned

Exercise

1. *For the principal views shown in figure exercise 3.1 draw an appropriate full section of the front views.*

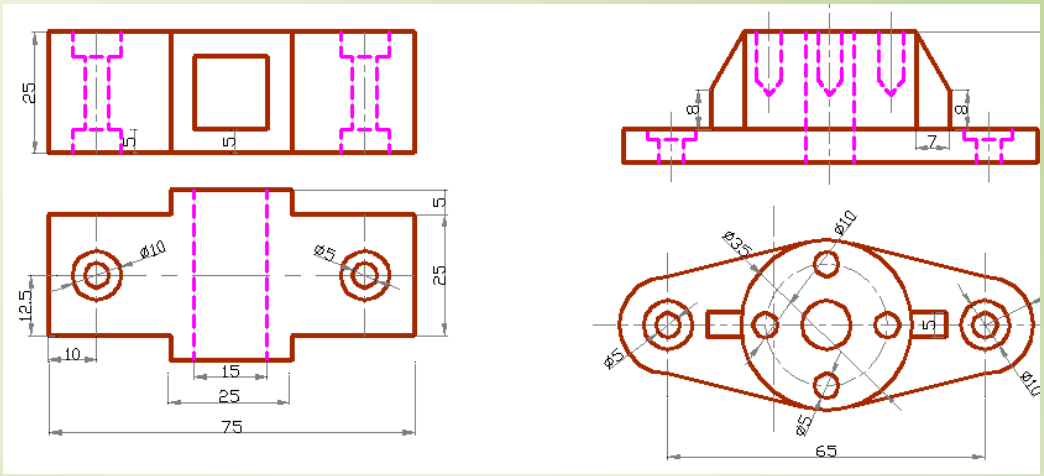

a)

b)

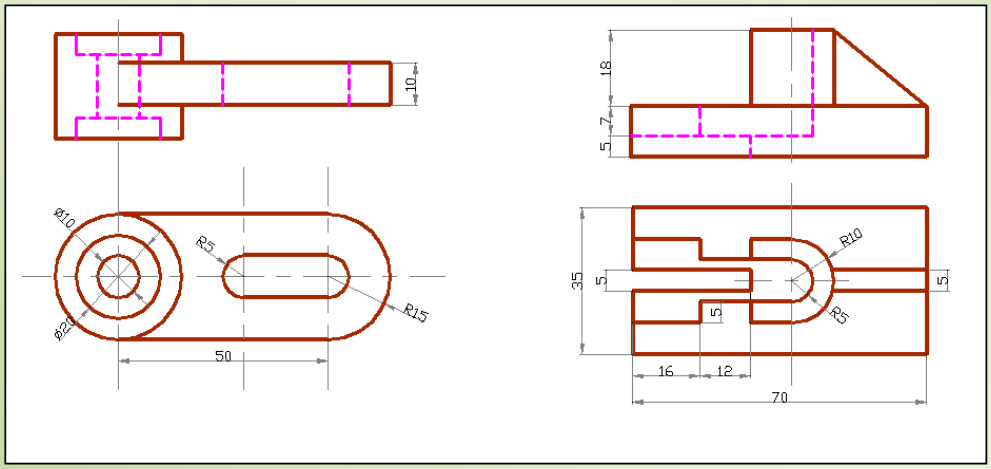

c)

d)

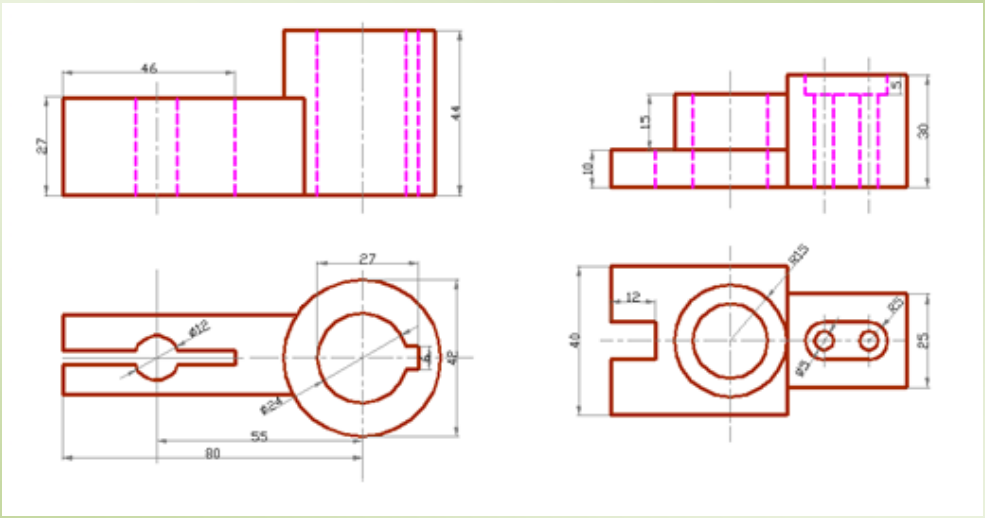

e) f)

2. For the principal views shown in figure exercise 3.2, draw an appropriate half-section.

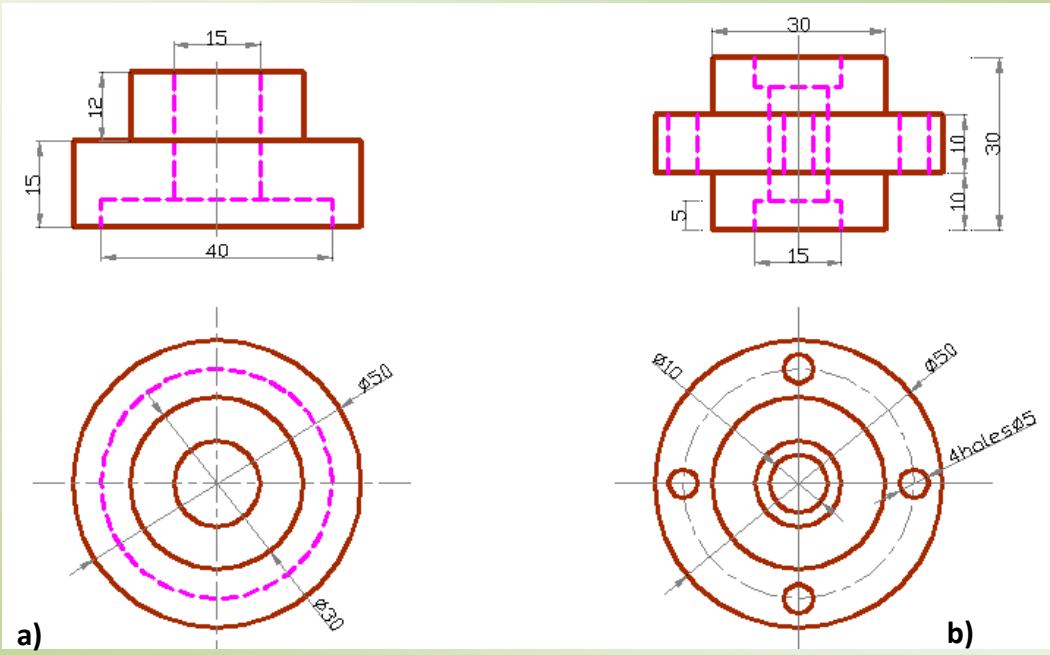

a) b)

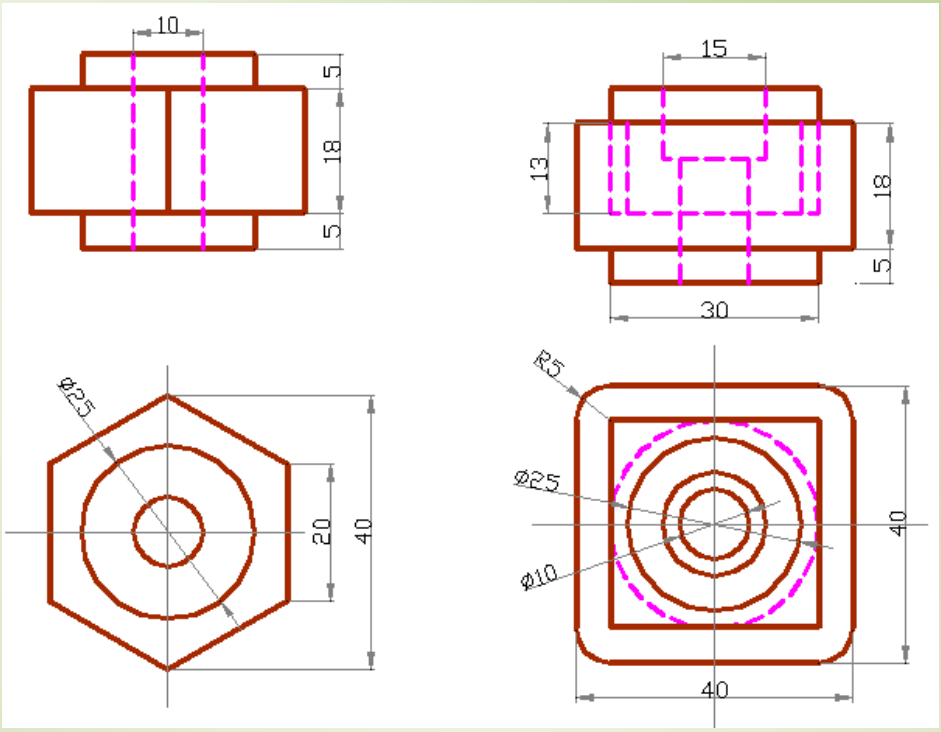

c)

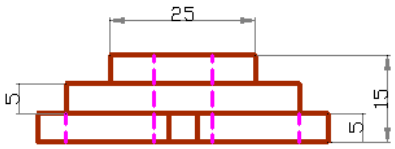

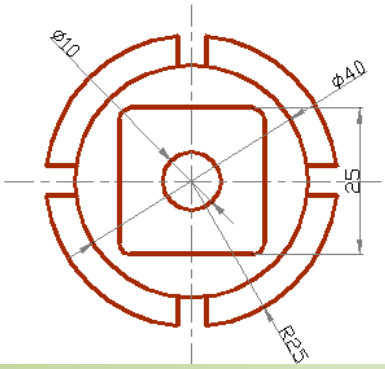

d)

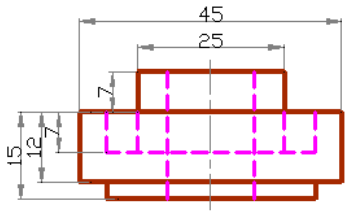

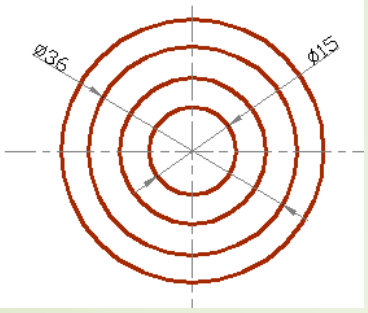

e)

f)

© Not Issued

3. For the principal views shown in the figure of exercise 3.3 choose an appropriate offset cutting plane line to show the front views in section

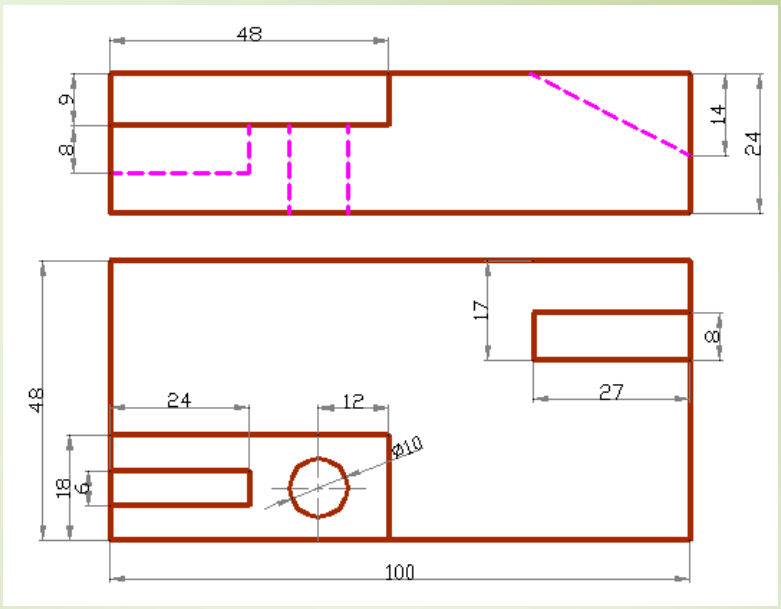

a)

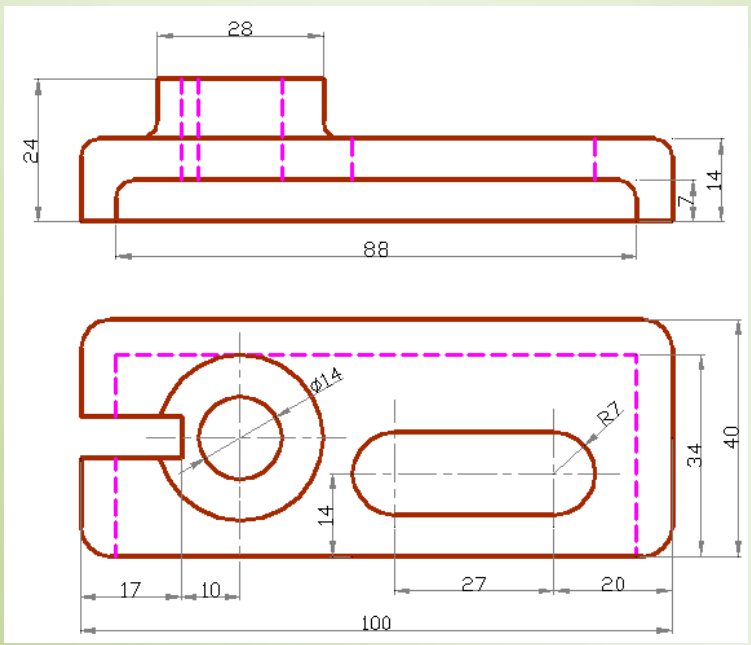

b)

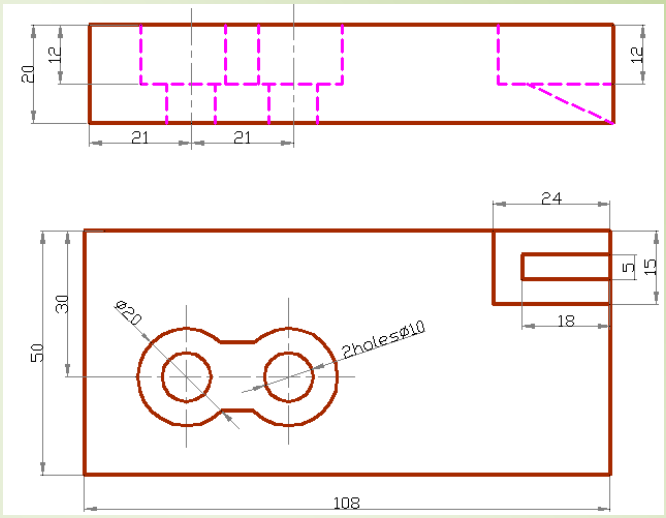

c)

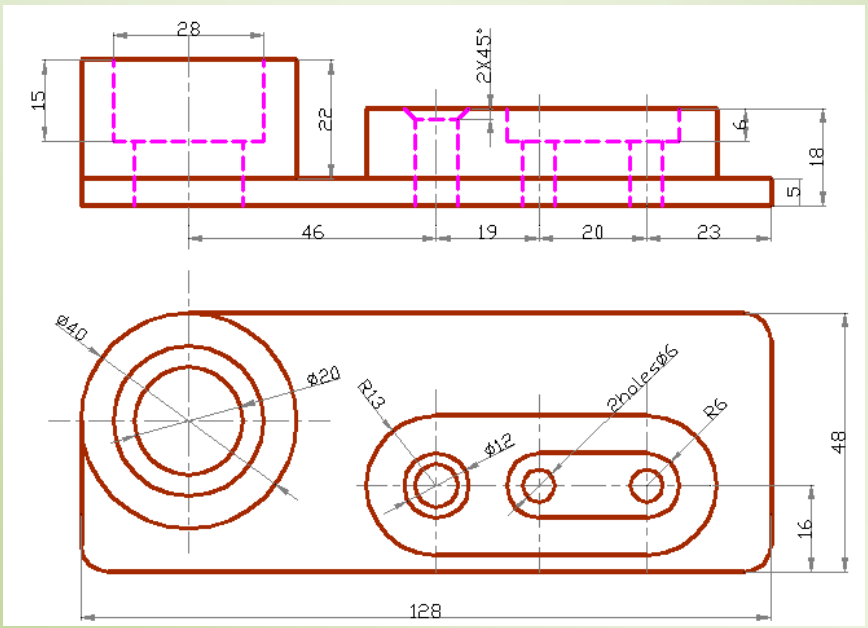

d)

© Not to be published

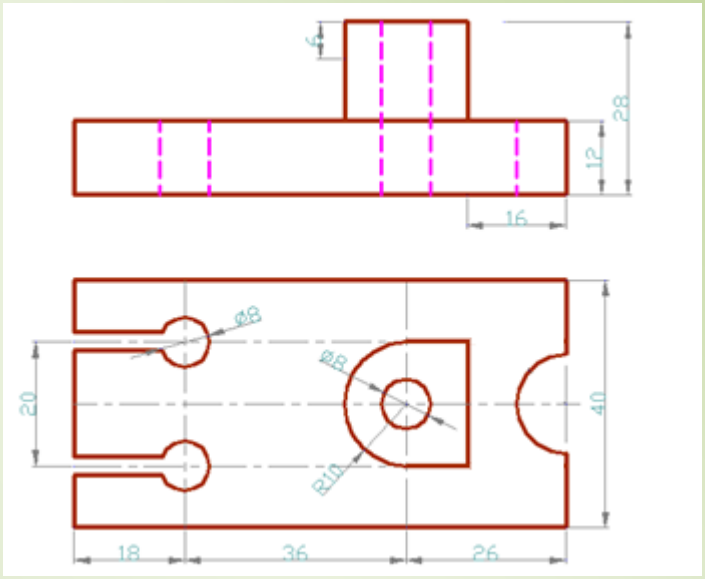

e)

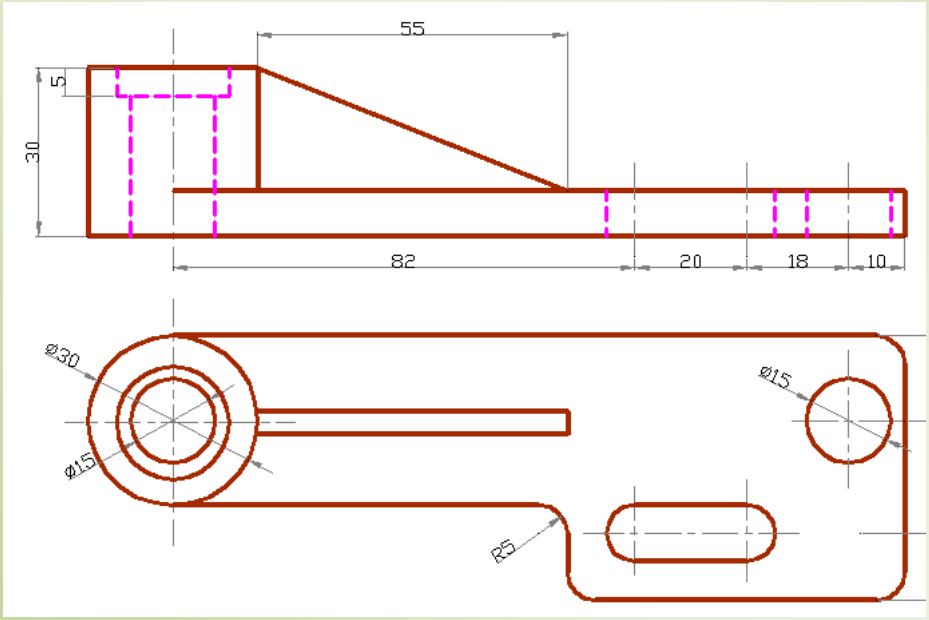

f)

Project I

Two views of a model are given in each of the following cases. Replace one of the views using either ***Full, Half or Off-set sectional view*** *and show your* ***cutting plan line.***

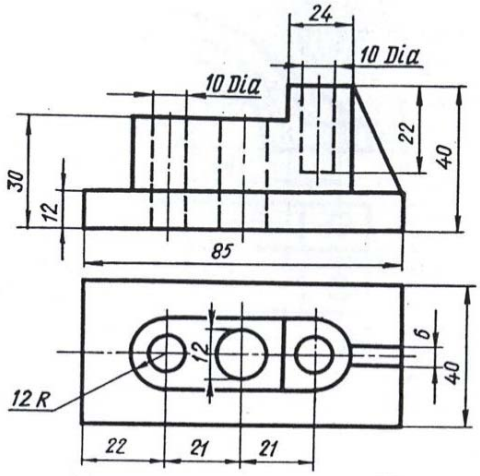

1.

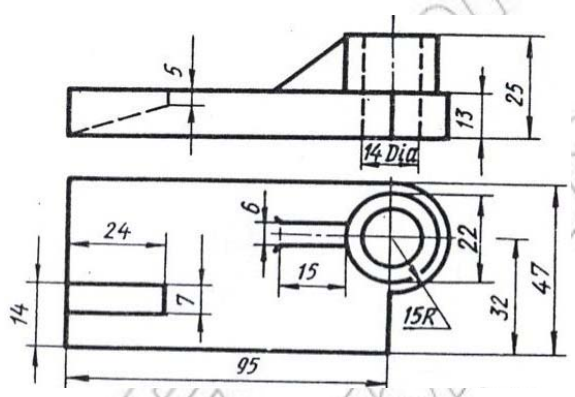

2.

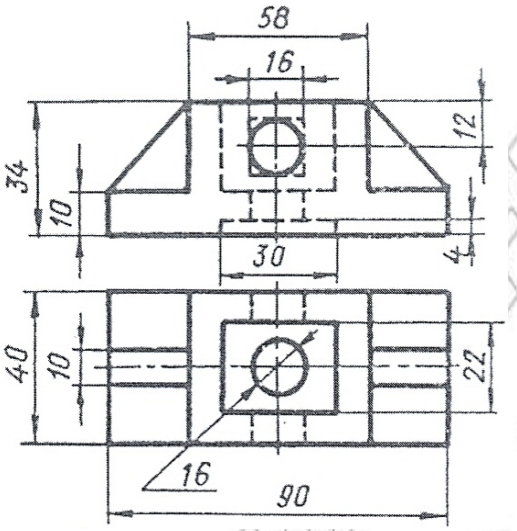

3.

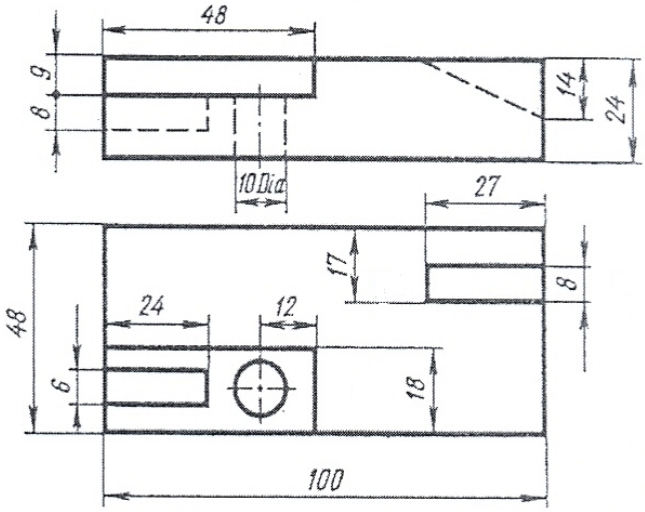

4.

UNIT 4

DIMENSIONING

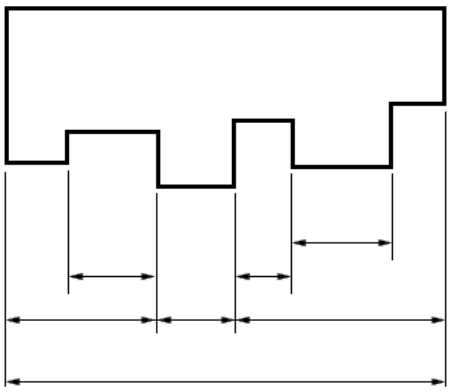

Combined Dimensioning

Learning Competencies:

Up on completion of this chapter you should be able to:

- ✓ **Know the importance of dimensioning;**
- ✓ **Identify the basic elements of dimensioning, such as dimension line; arrowheads extension line, leaders, notes, etc;**
- ✓ **Distinguish between the aligned system of dimensioning and the unidirectional system of dimensioning;**
- ✓ **Explain the theory of dimensioning;**
- ✓ **Differentiate between size dimensioning and location dimensioning;**
- ✓ **Understand the difference between datum dimensioning and chain dimensioning;**
- ✓ **Understand the rules of placement of dimensions on views.**

© Not to be republished

4.1 Introduction

What do you understand from the word Dimensioning?
How do you describe the size of your class room on drawing?

A Drawing of an object is prepared to define its shape and to specify its size. A complete drawing of an object gives its shape description and also a complete size description.

The shape description is based upon the theory of projection. The size description is based upon the theory of dimensioning. A dimension is the art by which the dimensions of an object are written on its drawing. The correct dimensioning requires a systematic way in which the dimensions are written on the drawing.

All the discussions throughout this text is supported by an illustration to explain the basic principle of dimensioning however those detail drawings not helpful for this explanation have been omitted.

4.2 Lines and Symbols

For a proper size description of an object, one must have basic knowledge and skill how to use the various symbols, forms and elements of dimensioning on its drawing. The basic symbols, forms and elements used in dimensioning are *dimension lines, extension lines, leaders, arrowheads, dimension (numerical values), symbols* explaining a feature's size and *notes.*

All these concepts are explained graphical on Fig 4.1.

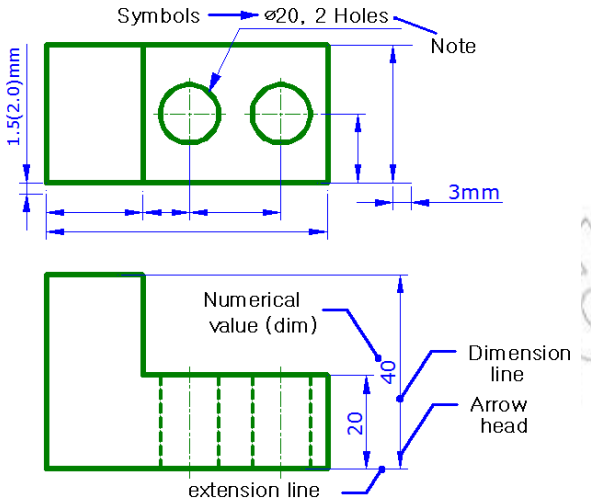

Fig.4.1 Notation of dimensioning

Forms of dimensioning

The two basic dimension forms while giving a size of a feature are a *dimension and a note* as shown on the above figure.

Dimension: refers to the numerical value used to give distance information between two specified points or size of a particular feature. It is placed centrally above or by breaking dimension line.

Note: Refers to the written word or Phrase used along with a dimension as explanatory information.

Leader: is a thin continuous line leading from a dimension value or an explanatory note to the feature on the drawing to which it applies. Leader lines start from a size or a note ends:

A) with an arrow head when it stops touching outline of view of a part and

B) with a dot when rests on a surface with in the outline of a part crossing its outline or

© Not to be republished

C) without any arrow and dot mark when rests on a dimension line as shown on figure below.

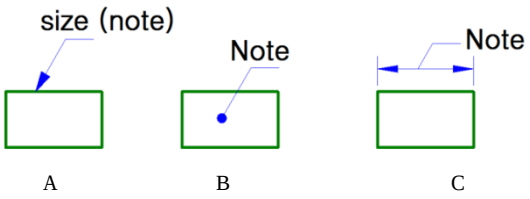

A) When touching outline of a part
B) When rests crossing nothing on a surface
C) When rest on a dimension line

Fig 4.2 Style of leader lines

Avoid the use of long leader line even if it means repeating features. Leaders should not cross each other rather one drawn parallel to the other.

Dimension line: is a thin continues line terminating commonly with an arrow head in a machine drawing and oblique stroke/ dot in architectural and structural drawing to indicate direction and extension of dimension.

Extension line/projection line: is a thin continuous line that extends from a point on a drawing to which a dimension refers to and providing a boundary for the dimension line.

It is usually drawn perpendicular to the outline and dimension line and there should be a gap of about 1.5 (2.0) mm from the outline of the object and 2mm extension beyond the dimension line.

Arrowheads: are terminators of dimension lines where they stop touching extension lines or features lines. They should be uniform in size and style throughout the drawing. The length of arrow head should be three times its width.

There are basically two styles of arrow heads namely *open* and *closed*; as shown in Fig 4.3. In fact there are very different styles of arrow head terminators.

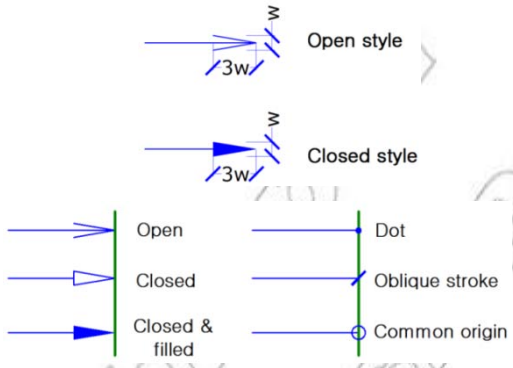

Fig.4.3 Style of arrow heads

Most often the closed filled in type is used for general purpose and oblique stroke for architectural and structural drawings.

4.3 Reading Direction of Figures

There are two systems of placing dimension based on the reading direction of figures.

Unidirectional dimension

Here dimension and notes should be placed to be read from the bottom of the drawing. This system in majority cases used for engineering drawing as show in Fig 4.4 (a) below.

Aligned dimension

In this system, all the dimensions are so placed that they may be read from the bottom or right hand edge of the drawing. All the dimension should stand normal to the dimension line as shown below on Fig.4.4 (b). Mostly this system of dimen-sion is used for architectural and structural drawings.

© MoE-FDRE Not to be republished

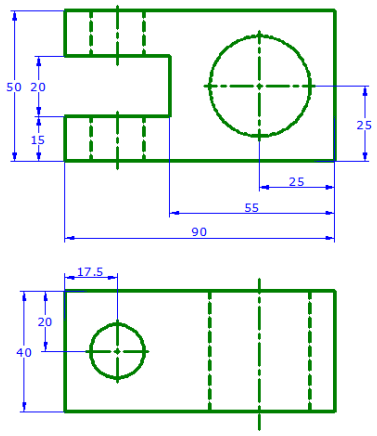

A) Unidirectional dimensioning

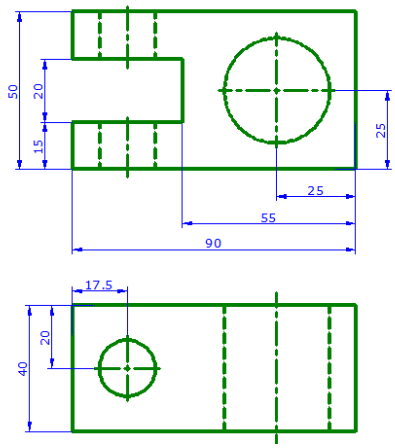

b) Aligned dimensioning

Fig 4.4 Unidirectional and Aligned dimensioning

Checkpoint 4.1

Redraw the given views of an object twice and then dimension them using aligned and unidirectional system of dimensioning.

4.4 Theory of Dimensioning

All objects are composed of one or more of the following different basic geometric shapes such as prism, cylinder, cone, pyramid and sphere.

So dimensioning an object becomes relatively easy if you first break it down into its component geometric shapes as shown on Fig.4.5.

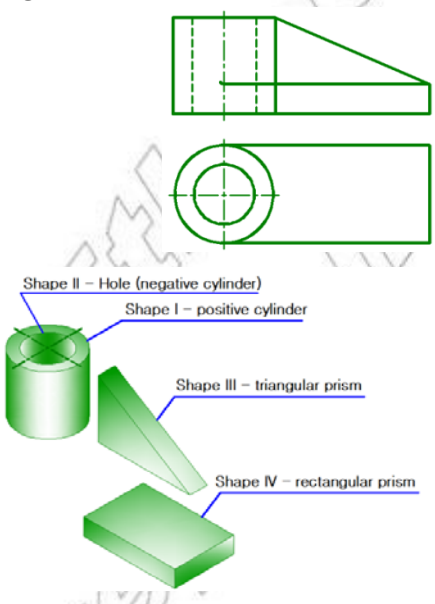

Fig. 4.5 An object broken down into its component parts

The object is said to be fully dimension when the two types of dimensions i.e. size dimension and location dimension are included.

4.4.1 Size Dimensioning

It is used to describe size of an object such as height, width, depth, thickness, length, radius, diameter etc, with regard to its form and other features like holes and slots.

© FDP not to be republished

4.4.2 Location Dimensioning

It is a type of dimension used to locate the various features like hole, slot etc, of an object relative to each other from center of one feature to centerline of another similar/ different feature or to a reference edge. It can be given in all width, height and depth direction.

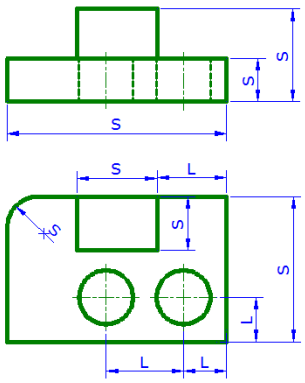

Fig.4.6 Size and location dimensions

Activity 4.1

- What is the difference between size and location?

Checkpoint 4.2

Show the size and location dimension of the object whose views are given below.

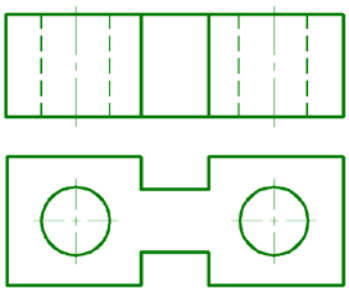

4.4.3 Selection of Dimension

When dimensioning an object, the dimensions to be given should be selected in such a way that they are convenient for the workmen to use during manufacturing. The following points should be noted during selection of dimensions:

- Dimensions of mating parts should be selected so as to ensure proper functioning.
- Dimension should not be duplicated or minimum number of dimensions should be used (Fig.4.7 (c) and (d)).
- Dimensions should be selected so that it will not be necessary to calculate, scale, or assume a dimension during manufacturing.
- Selection of location dimension require more attention than size dimensioning.
  - A hole dimension is given using diameter than radius on its circular view (Fig.4.7 (a) and (b)).

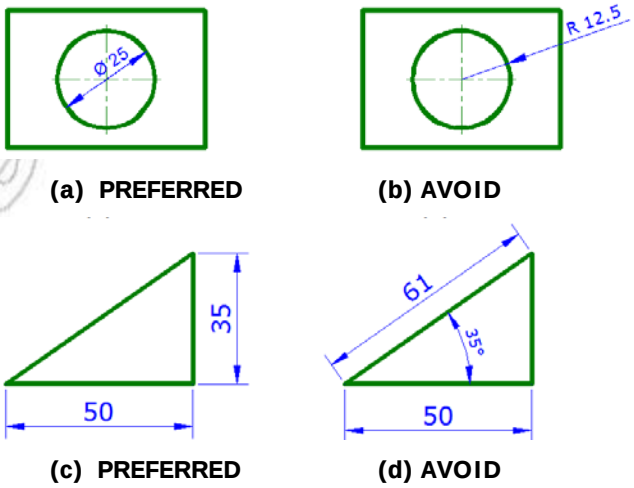

Fig. 4.7 Selection of dimension

Scale of a drawing

Scale is a means by which we determine the graphical size of an actual object on paper with equal, reduced and enlarged size. Regardless of the scale used, the dimension figures shown on the drawing always represent the actual size of the object.

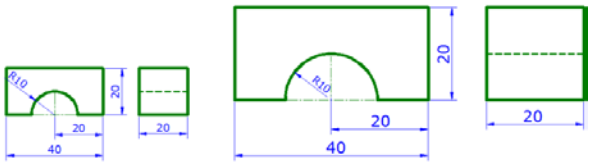

Fig.4.8 Relationship between scale of the drawing and dimensioning

The term also refers to the ratio between the size of a drawing and the actual object. A scale drawing can be larger, smaller or the same size as the object. Object should be drawn full size whenever possible. For example, a scale of 1:2 implies that one unit on a drawing represents two units of corresponding actual size of an object.

4.5 Methods of Dimensioning

There are different methods of dimensions to be used depending on the characteristic feature of an object dimensioned. However, at this level of technical drawing course only two of the commonly used methods are discussed and these are namely:

A) Chain or point to point dimensioning and
B) Datum or base line dimensioning

4.5.1 Chain Dimensioning

It is a method of dimensioning used when a series of dimensions is given on a point to point basis. The disadvantage of this method is it may result in an undesirable accumulation of tolerance error between individual features (the term tolerance will be discussed and understood at a higher level of education). So this method is not preferred for a product or part requiring high accuracy. This method may be adequate for describing simple parts, as shown on Fig.4.9.

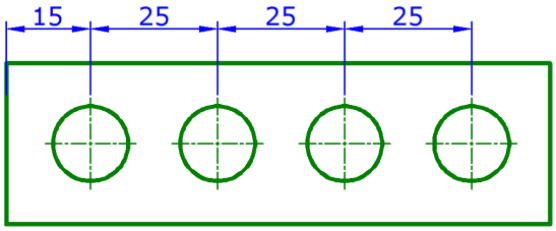

Fig 4.9 Chain dimensioning

4.5.2 Datum or Base Line Dimensioning

Points, lines or edges and surfaces of an object from which the locations of other features of the object are established is known as *datum*s. For example the left side and bottom surfaces of the object, as shown in Fig.4.10 (A) are the datum surfaces and similarly the centerlines of the largest holes are used as datum lines for the other object as shown in Fig.4.10 (B).This dimension may be necessary if a part with more than one critical dimension must mate with another part as shown in fig 4.10 (A) and (B).

© NIOS FDR Not to be republished

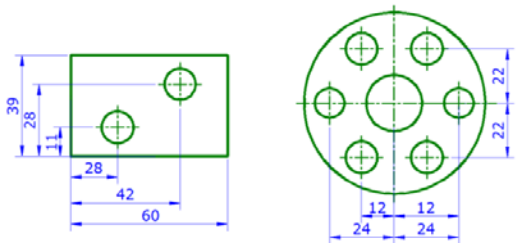

(a) (b)

Fig. 4.10 (A) and (B) datum dimensioning

4.5.3 Combined Dimension

These are the result of simultaneous use of chain and parallel dimension as shown in Fig.4.11.

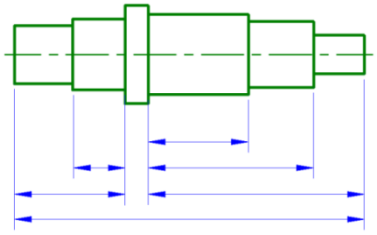

Fig. 4.11 Combined dimensioning.

Activity 4.2

1. From the basic terms of dimensioning listed earlier suggest a good positioning of dimension line, dimension text, extension line with example.
2. What do you understand with the difference b/n the words chain, datum and combined?

Checkpoint 4.3

Redraw the given views of an object and then dimension them using chain and parallel method of dimensioning.

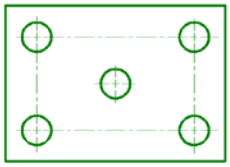

4.5.3 Standard features Dimensioning

Circular Feature

Diameter: should be dimensioned on the most appropriate view to ensure clarity. Circle is dimensioned by diameter. The dimension (numerical value) is preceded by ϕ symbol.

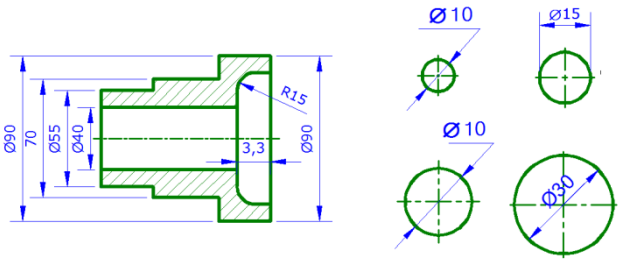

(a) (b)

Fig. 4.12 Dimensioning of diameters

Arcs: are dimensioned by giving the radius on the view that shows the true shape of the arc. The dimension line for the radius of arc should always be drawn at 30°, 45°, 60° but not vertical and horizontal. The dimension of chords, arcs and angles are shown in Fig.4.13

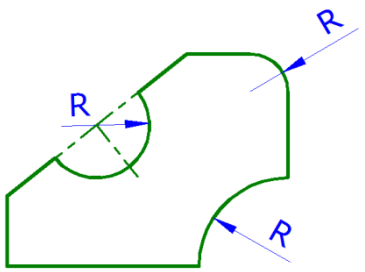

Fig.4.13. Dimensioning of arcs, cords and angles.

Curves: non-circular curves can be dimensioned by datum dimensioning method.

© NCERT not to be republished

The more the number of points used on the curve, the better the curve is dimensioned.

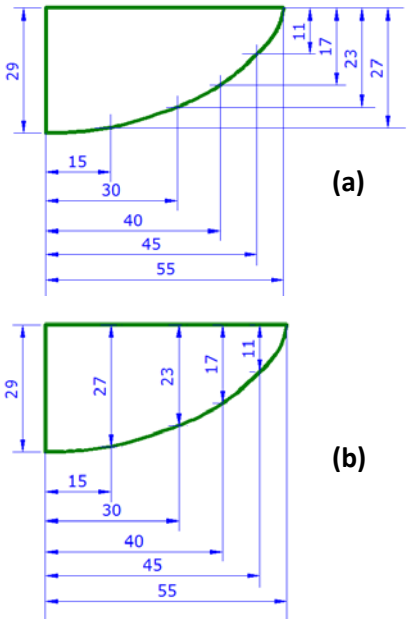

Fig. 4.14 Dimensioning of non circular curves.

Chamfers

Chamfers are normally dimensioned by giving their angles and linear lengths. When the chamfer is 45°, it may be specified as a note.

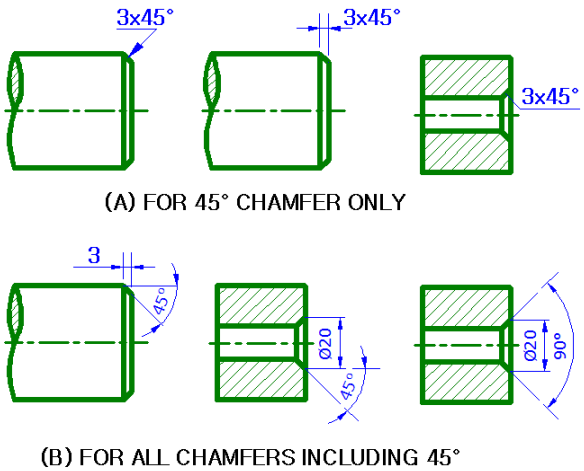

Fig. 4.15 dimensioning of chamfers.

Angles

When dimensioning an angle the dimension line will be an arc centered at the vertex of the angle

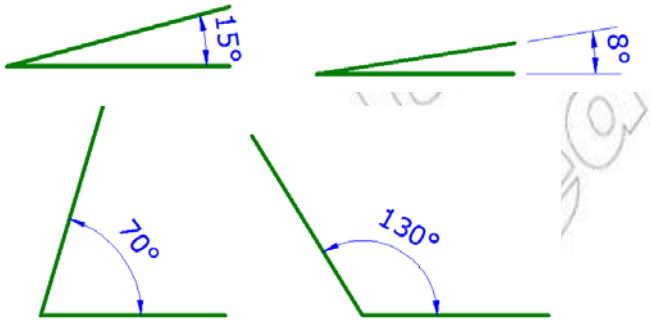

Fig 4.16 Dimensioning of angles

Holes

Plain and round holes are dimensioned in various ways depending upon the design and manufacturing requirements. However the leader is the method most commonly used as shown on Fig.4.12.

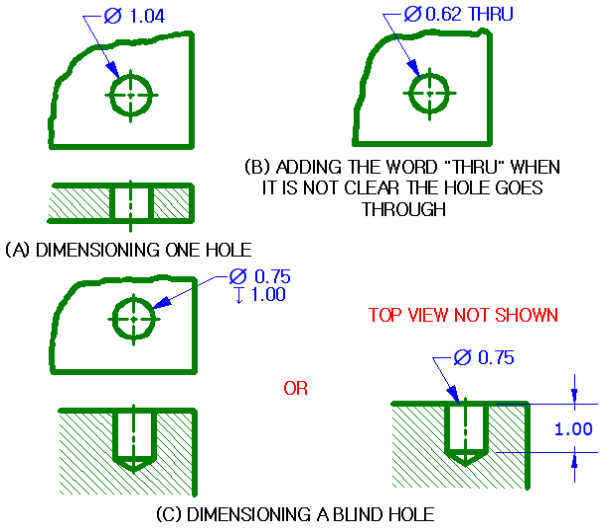

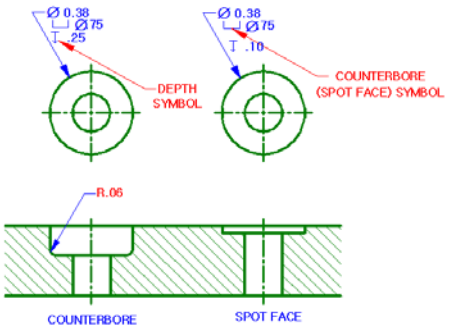

(a) Using symbols

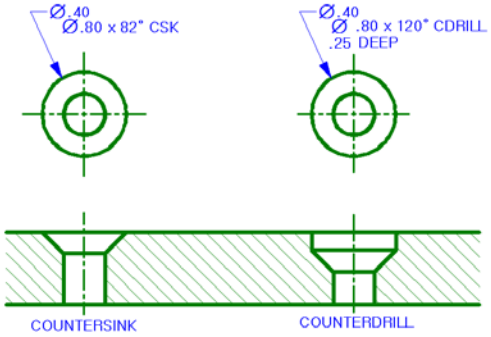

(b) Using words

Fig 4.17 Dimensioning of holes.

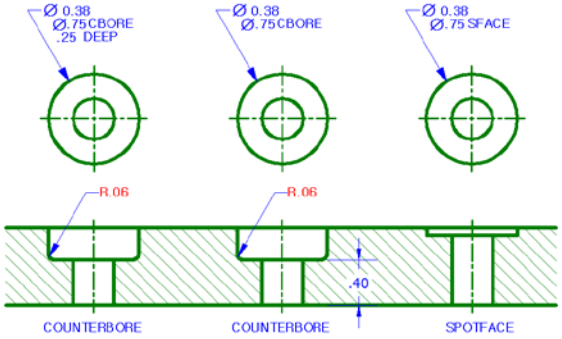

(b) Using words

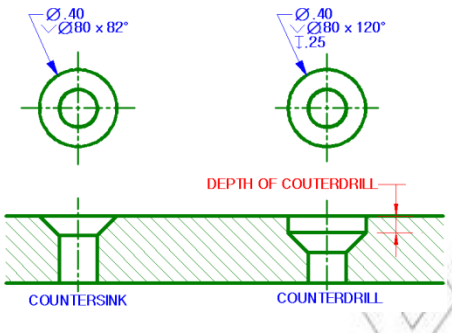

(a) Using symbols

Screw thread

Screw threads are always specified with proper designation i.e. the nominal diameter is preceded by the letter M. The useful length of the threaded portion only should be dimensioned when dimensioning the internal thread, where the length of the drilled hole should also be dimensioned.

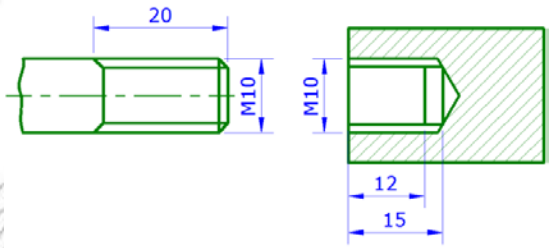

Fig. 4.18 Dimensioning of screw threads

Repetitive features

They are specified on a drawing by the use of an X mark in conjunction with the numeral to indicate the “Number of times” or “places” they are required.

© MoE, FDR Ethiopia Not to be republished

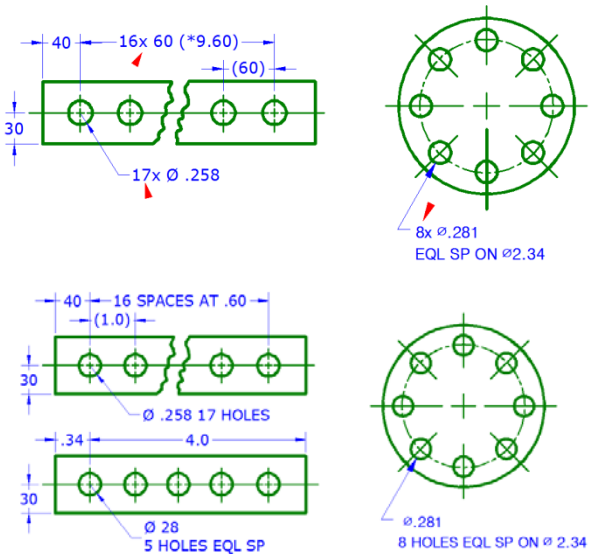

Fig. 4. 19 Dimensioning of repeated features

Note: EQL SP is to mean equal space.

Slopes and tapers

A slope is the slant of a line representing an inclined surface. It is expressed as a ratio of the difference in the heights at right angles to the base line at specified distance apart. A taper is the ratio of the difference in the diameter of two section perpendicular to the axis of a cone to the distance between these sections.

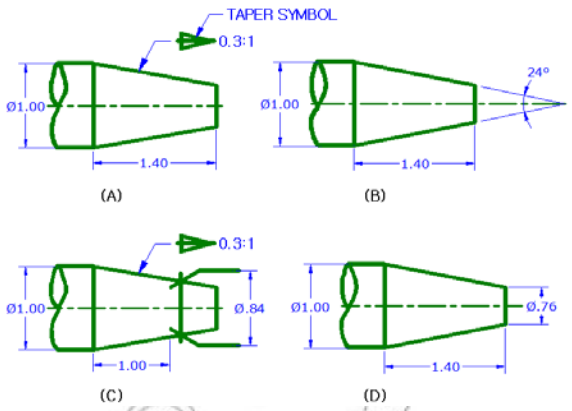

Fig. 4.20 dimensioning of slopes and tapers

4.6. Placement of Dimension

Dimension should be placed on the following elements so that reading of them will be easy and comfortable.

4.6.1 Dimensioning of Views

Dimensions should be selected carefully and placed on a view that shows the contour of the feature to which they apply.

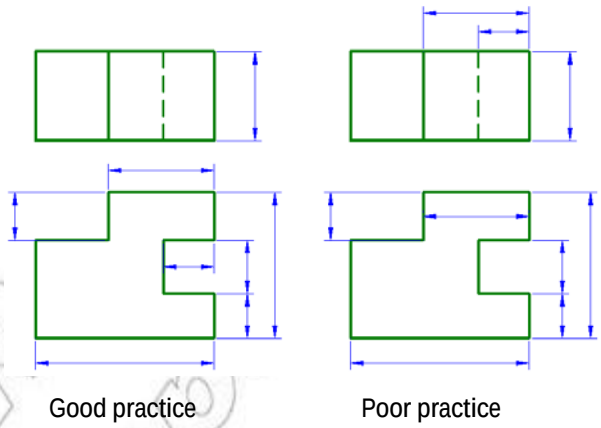

Fig. 4.21 Dimensioning of views.

Placement rules of dimensions on view

1. Dimension should be placed between views whenever possible unless required elsewhere.
2. Dimension should be placed outside the views of an object unless and otherwise placing them inside is required for clarity and ease of reading especially for large views.
3. Dimension given on one view should not be repeated on another view. A redundant dimension may be given when required

for reference dimension by placing it in a bracket.

4. Dimension should be taken from visible outline than the invisible (hidden) line.
5. Use only one system of dimension either aligned or unidirectional on one or more views of an object.
6. Use the same unit of measurement and dimension line terminator (arrowhead) on a single view.
7. Dimension should be placed on a view that shows the true length edge of an inclined surface.
8. Dimension the view that best shows the characteristic contour or shape of the object.

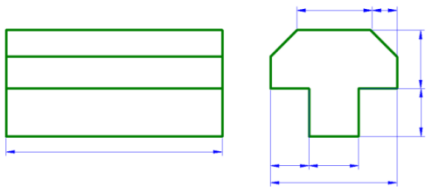

Fig. 4.22 Dimension a view showing characteristic shape of an object.

9. In a parallel method of dimensioning the shortest and longest dimension lines should be placed closest and farthest from the outline of the view respectively.
10. Dimension figures should be placed midway between arrowheads of a dimension line unless staggered as in the case of parallel dimension to improve clarity and reading of dimensions.
11. Avoid using centerline and outline of a view of an object as dimension line, however centerline may be used as extension line.
12. Avoid crossing of two dimension lines and extension line.
13. When an overall dimension is given at outermost, one of the intermediate dimension should be omitted to avoid redundant dimensioning as in parallel dimensioning.
14. Avoid any dimension line which passes through a dimension figure.
15. The distance from the outline of a view to the first dimension line and between parallel dimension lines varies from 5-10 mm. Use a single uniform distance between dimension lines.

4.6.2 Dimension on Limited Space

When the space between the extension lines is too small to permit placing of the dimension line and the dimension, an alternate method of placing them is shown on Fig.4.23.

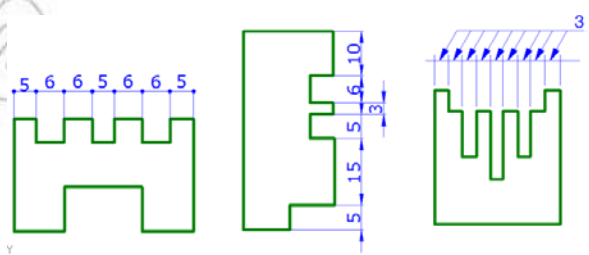

Fig. 4.23 Dimensioning in limited space.

© MoE FDR Ethiopia Not to be republished

4.6.3 Pictorial Drawing Dimensioning

Activity 4.3

1. Do you remember any exercises given on orthographic projection?
2. How can you dimension those exercises?

Some time when the need arises to give dimensioning on the pictorial representation of an object the following few basic principle of pictorial drawing dimensioning should be noticed.

Dimension line and extension lines should be drawn parallel to the isometric axes. It is better to use aligned system of dimensioning to dimension arcs and curves in pictorial drawing. Leaders and associated notes should be placed in a plane parallel to the face on which the dimension applies as shown in Fig.4.24.

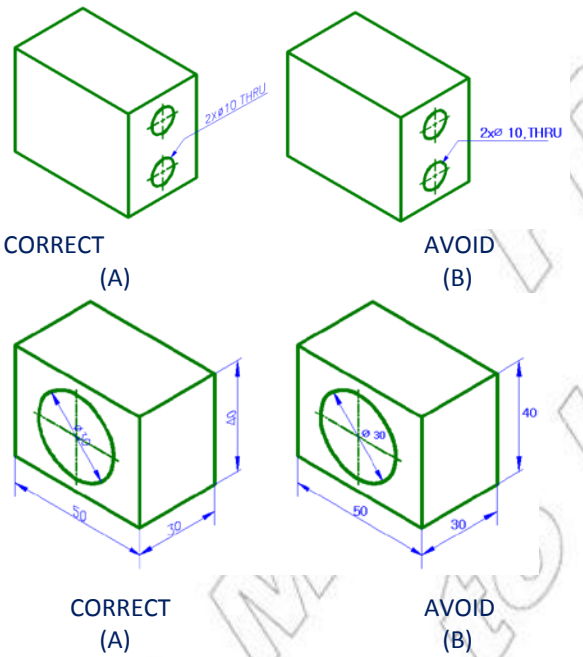

Fig. 4.24. Pictorial dimensioning

Key terms

- ***Datum***: is a point, line, or surface from which all measurements are taken.
- ***Leader lines***: are thin continuous lines that point to features on an engineering drawing with an arrowhead. They are accompanied by a dimension or local note that specifically describes circular feature.
- ***Tolerance***: is the allowed deviation for a specified dimension. How much deviation is acceptable is different for each type of job. The deviation or error is displayed as ± measurement.

© MoE DR Not to be republished

Unit Summary

A detailed drawing must indicate not just the shape, but the size of the object. Additional information such as surface finish, welding techniques, material lists and tolerances may also be included. Dimensioning includes both size and location dimensions.

Dimensions should be placed outside the object for clarity. Try not to repeat dimensions on drawings. Extension lines must be light and do not start in contact with the outline of the object. Arrow heads are also usually three times the length compared with the width.

The following are a few basic rules that summarize what might well be a list of hundreds of very specific rules that apply to dimensioning. Review the list carefully. Make each of these items a part of your dimensioning practices.

- Each dimension should be clearly shown and stated so that it can be interpreted in only one way.
- Dimensions should be placed in the view where the best shape and true form are shown.
- Place a dimension between views, especially if it applies to both views and will improve clarity.
- Do not assume that a part is symmetrical. Dimension both sides of a symmetrically shaped part or use the centre line symbol or note to avoid confusion.
- Spacing between dimensions should be consistent within a drawing.
- Line up dimensions horizontally or vertically where possible.
- Avoid crossing dimension lines or leaders where possible.
- Cylinders should be dimensioned in their rectangular view.
- When using chain dimensioning don't complete the chain. Instead dimension all but one part of the chain and do an overall dimension.
- Dimension circles by their diameter and arcs by their radius.
- Use dimensioning symbols where appropriate.

Exercise

EXERCISE I

1. How are concentric circles best dimensioned?
2. Sketch the symbols for: diameter, radius, depth, counter bore, countersink, and square.
3. Where are the symbols listed in question 2 placed with respect to their numerical values?
4. When is a small cross required at the center of a radius?
5. When the depth of a blind hole is given, to what does the depth dimension refer?
6. When should extension lines be broken?
7. How is a reference dimension identified?
8. How can you tell if a dimension is out of scale (without measuring the drawing)?
9. Write a note that would show that a 10mm deep 20mm diameter hole is to be repeated six times.
10. How can you tell if an arc is to be dimensioned as a diameter or as a radius?
11. What is the proper proportion of width to length of arrowheads?
12. Compare the thickness of dimension lines to object lines.
13. Compare the thickness of dimension lines to extension lines.
14. If two dimensioning guidelines appear to conflict, which guideline should be followed?

EXERCISE II

The orthographic views of some objects are given below, redraw the views and dimension them using aligned system and convenient method of dimensioning.

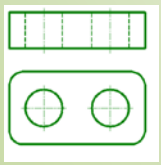

(a)

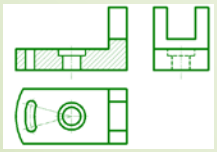

(b)

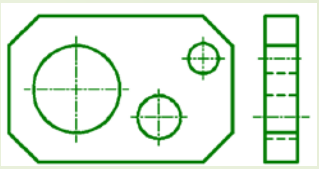

(c)

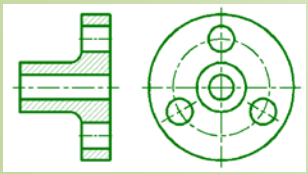

(d)

Exercise II

Make pictorial dimensioning and then draw the required number of view of each pictorial drawing and dimension them using unidirectional system and convent method of dimensioning.

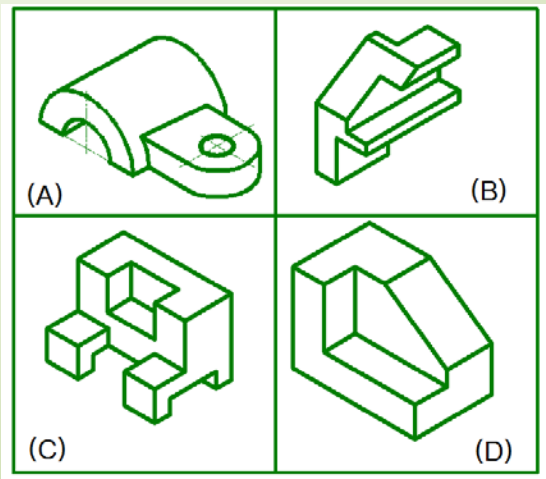

© MoE, FDI
Not to be rep

UNIT 5

DEVELOPMENT AND INTERSECTION

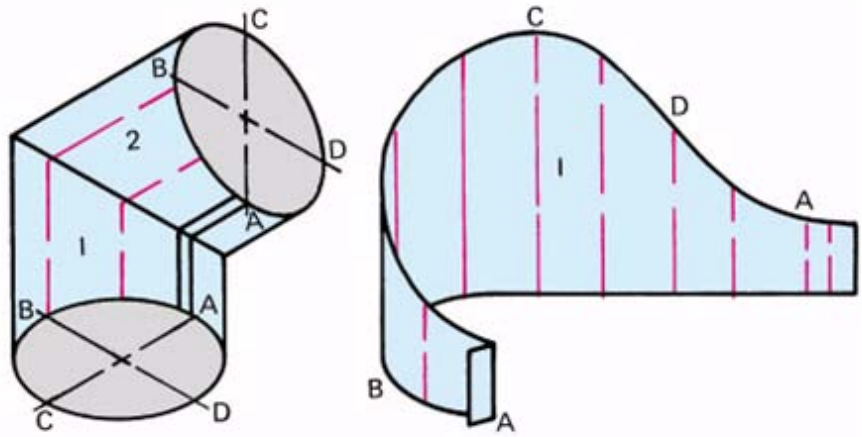

Learning Competencies:

Upon the completion of this unit, you should be able to:-

- ✓ **identify the various types of surfaces and solids;**
- ✓ **identify the types of hems and joints used in sheet metal working;**
- ✓ **prepare the pattern development of common solids like prism, cylinder , pyramid and cone;**
- ✓ **determine the line or curve of intersection of two intersecting solids such as prisms and cylinders.**

© Not for the

5.1. Introduction

What do you understand from development and intersection technically?
What do you think are the elements intersecting?
Can you give examples?

This unit deals with the two very important technical drawing concept, that is *developments* and *intersections*.

But before directly begin discussing the above two concepts. It is better to have a brief over view about the definition and description of basic geometrical elements such as point, line, surface and solid.

Point

Point is a theoretical representation of location of an element /object in space. It has no dimension i.e. height, width and depth.

Line

Line is one generated by a point moving according to a law which may be expressed by a geometric description or by an algebraic equation. It has one dimension i.e. only length.

Surface

Surface is a two dimensional geometrical figure, which may be generated by a motion of either straight or curved line. It is called the *generatrix* of the surface. Any position of the generatrix is an element of the surface. There are two types of surface: Ruled surfaces and double-curved surfaces.

I) A ruled surface: It is a surface generated by the motion of a straight line in a certain desired path. This type of surface may include planes, single-curved surfaces and surfaces.

A Plane is a ruled surface generated by moving a straight line along a line (lying in the same plane) in such a way that its new position of moved line is parallel to the original line. A Plane surface may have three or more sides.

A Single curved surface is a curved ruled surface that can be developed or unrolled to coincide with a plane. Any two adjacent positions of the generatrix of a single-curved surface lie in the same plane, for example cylinder and cone (Fig.5.1 (c) and (e)).

A warped surface is a curved ruled surface that cannot be developed; here no two adjacent positions of the generatrix lie in the same plane. Examples are helicoid and hyperboloid as shown in Fig.5.2. So we conclude that it is a surface that is neither plane nor curved e.g. the hoods on most automobile are warped surfaces.

II) Double-curved surface is one that may be generated by a curved line and thus has no straight line element. Examples are sphere, torus and ellipsoid (Fig.5.1 (f)).

Solid

Solid is a three dimensional representation of an object which may be generated by bounding plane surfaces or revolving of a plane figure about an axis. It shows height, width and depth dimensions of the object.

© NCERT not to be republished

(a) The five platonic solids

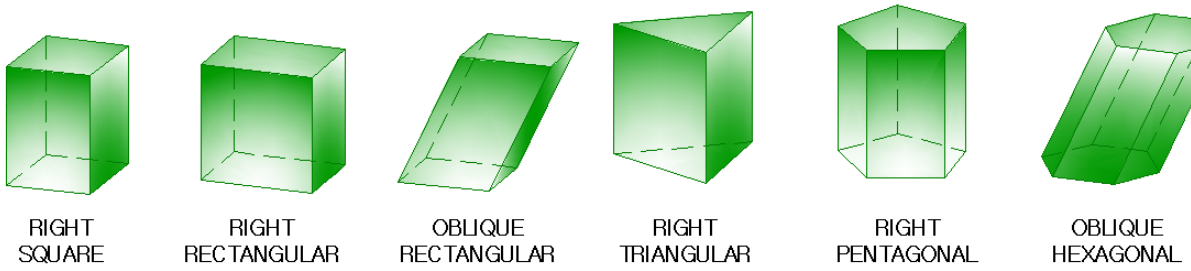

(b) Prisms

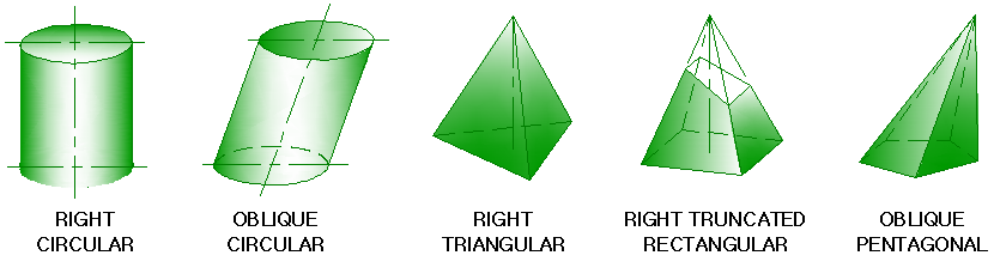

(c) Cylinders *(d) Pyramids*

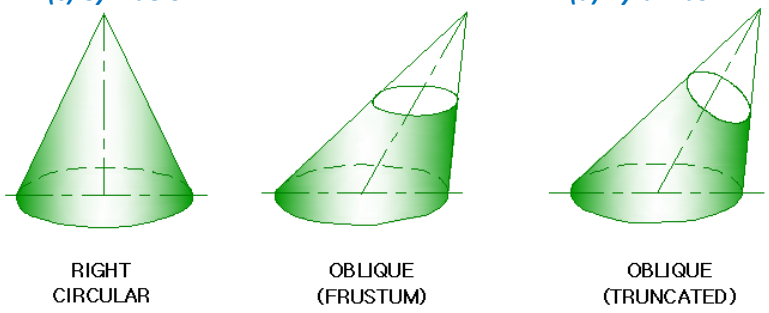

(e) Cones

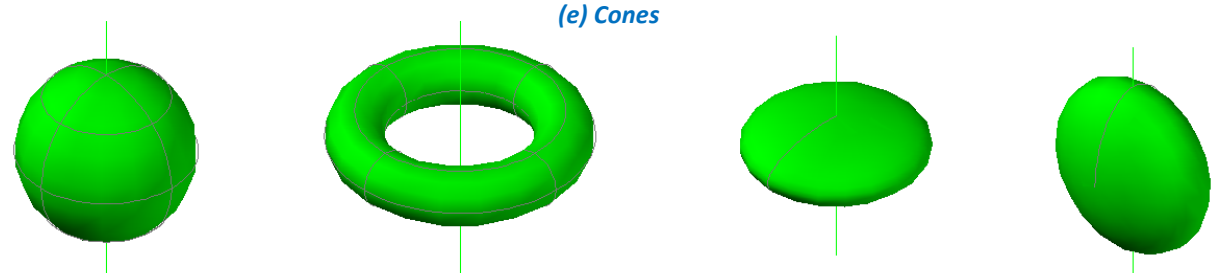

(f) Double curved surfaces

Fig. 5.1 Solids and surfaces which define the geometry of three-dimensional objects

There are three groups of solids. The first groups are solid that are bound by plane surfaces are called *polyhedra*. The common examples of polyhedra are the *prism* and *pyramid*. Those polyhedra whose faces are all equal regular polygons are called *regular polyhedra*. The five polyhedra are the *cube, tetrahedron, octahedrone, dodecahedron,* and *icosahedrons*. They are collectively known as the *five platonic solids* as shown in fig 5.1(a). Plane surfaces that bound polyhedra are called *faces* of the solids. Lines of intersection of faces are called *edges* of the solids.

The second groups are solids that may be generated by revolving a plane figure about an axis in the plane of the figure. They are called *solids of revolution*. These include solids bound by single curved line example cylinder and cone, or include solids bound by a double curved line example sphere, and torus.

The third groups are solids that are bounded by surfaces. These solids do not have group name.

5.2 Development

Have you ever seen a model of a building?
How do you think real objects with a shape cube or cone can be constructed with a model paper?

Development is a complete layout of all surfaces of a solid on a plane or flat object. A surface is said to be developable if it can be unfolded / unrolled to coincide with a plane. Surfaces of polyhedral and single-curved surfaces are developable. But warped surfaces and double curved surfaces are not developable they may be developed by approximately dividing them into developable sections.

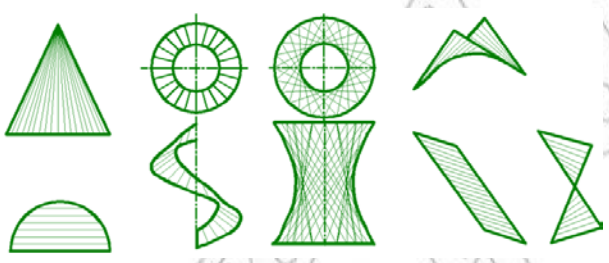

Fig. 5.2 Warped surfaces

In this unit, the development of the basic geometrical solids (Shapes) such as prism, cylinder, pyramid and cone is dealt by using the different methods of development to be discussed later on.

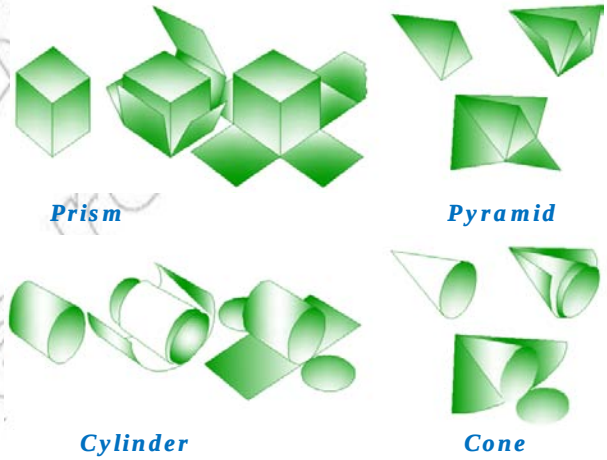

Fig. 5.3 Development of surfaces of solids

Practically the drawing operation consists of drawing the successive surface in their true size and shape with their common edges joined to each other.

Any professionally worker in a design and manufacturing industry is frequently required to have the knowledge of development of surfaces of an object. Practical application of development occurs for preparatory of packaging materials, cardboard and matc-hboxes, tin cans, funnels, cake pans, furnaces, pipes, elbows, ducts and roof gutters etc. made up of hard paper and sheet metal to be used as a container of various edible and nonedible item in a supermarket, to prepare many other house hold material and in many industries like automobile aircraft etc.

Principle of development

During making developments of surfaces, the following general rules should by observed.

1. Developments of solids are usually made with the inside surfaces up to facilitate bending or rolling during manufacturing.
2. It is possible to begin development of a solid from any edge desired, however it is a good practice to start and end with the shortest edge to provide strength of the final solid formed and ensure an economical usage of fixing material like UHU for paper models and soldering, welding and riveting for sheet metal model.
3. When making the development of a solid, elements should be labeled using numbers or alphabet of letters in the clock wise direction.
4. Bend or foldlines should be clearly shown in the development so that they will be used as guides for rolling or bending when making the final product.
5. Extra material to be used as lap or seam should be provided at the end element lines of the development where fixing or fastening is required. The amount of material to be added varies depending on the thickness of the material, the type of connection and production equipment.

Hem and joints for sheet metal works

Various types of hems and joints are used during manufacturing ducts, tanks, containers and other products from sheet metal. Hems are used to make the raw edge smooth and help to strengthen the material. Some of the more common types of hems and joints are shown below.

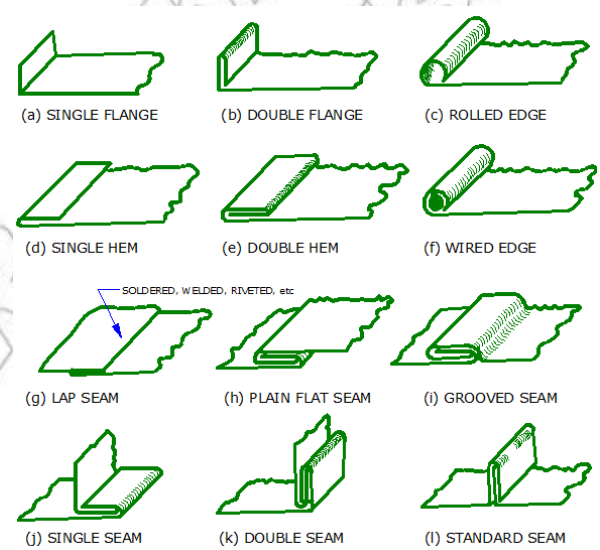

Fig. 5.4 Hems and joints used in sheet metal work

5.2.1 Methods of Development of Solids

- If you want to develop a cube and a cone, do you think that both of them can be developed with the same method?

There are three commonly known methods of developing solids based on their basic shapes like prism, cylinder, pyramid, cone and

transition piece. However, only two of these methods are discussed in this text book.

5.2.1.1. Parallel Line Development

This method of development is used to develop shapes that are based on prism and cylinder by making use of stretch-out-line principle.

Note: All example of pattern development discussed in this unit do not include the extra materials to be used as a seam.

If the pattern development of a solid excludes the top and bottom cover, it is known as lateral surface development. But if it includes the top and bottom cover, it will become complete surface development.

A solid is said to be right solid if its axis is made perpendicular (90^0) to the base of the solid. Example are and Right prism, right cylinder. By default all solids are assumed to be right solid unless otherwise specified.

A solid is said to be oblique solid if its axis makes any acute angle with the base of the solid, Example are Oblique prism and oblique cylinder.

The term "*truncated*" is used in conjunction with some solids just to indicate that the solid has got an inclined or oblique surface formed after cutting it with a cutting plane at any assumed angle.

Checkpoint 5.1

a) Define three of the basic geometric element.
b) Write types of surfaces that are developable and non developable.
c) List three types of hems and joints.
d) What is development?
e) List the methods of pattern development you know.

Development of prism

Prism is a type of solid shape developed by parallel line method of development.

(A) To develop a full right square prism.

1) Draw the front and top views of the prism.
2) On the top view, number the edges in the clockwise direction so as to ensure the development will be made inside up. Also, number the edges on the front view in agreement with the numbering on the tip view.
3) Construct the stretch-out line 1-1 through the base of the front view.
4) Transfer the true width dimensions of the lateral faces of the solid from the top view on to the stretch out line sequentially to locate points 1, 2, 3, etc.
5) Draw perpendicular lines from the stretch-out line through 1, 2, 3 etc.

© MoE, FDRE
Not to be republished

6) Transfer the true lengths of the edges of the prism from the front view using horizontal projection lines to the corresponding line on the development, to locate 1′,2′,3′, etc.

7) Complete the lateral surface development by joining the points so obtained at step 6. To prepare the complete surface development include the top and bottom faces (covers) as show in fig 5.5.

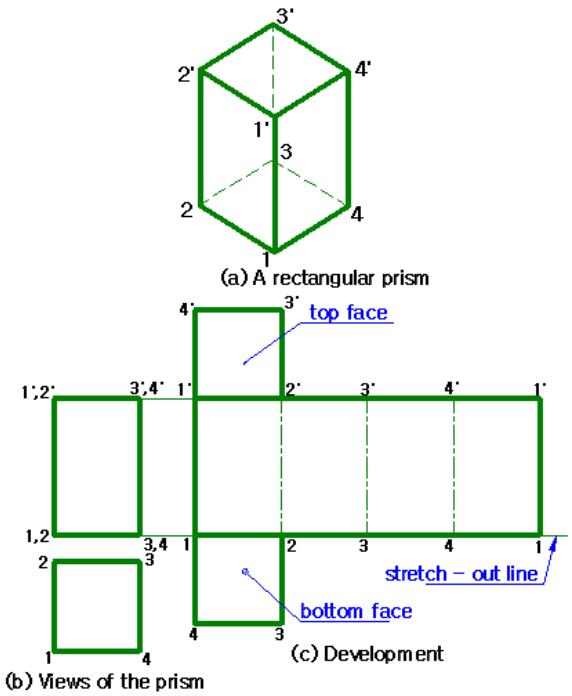

Fig. 5.5 Development of rectangular prism

Checkpoint 5.2

Prepare the pattern development of pentagonal prism whose height and one side length (face width) is 60mm and 20mm respectively.

(B) To develop a truncated square prism

1) Draw the front and top views of the prism.

2) Label (name) all the top corners in a clockwise direction, starting the development preferably from 1 the shortest edge. Also label all corresponding edges of front view with labeling made on top view.

3) Construct the stretch-out line 1-1 passing through the base of the front view.

4) Transfer the true width dimensions of the faces from the top view on to the stretch-out-line sequentially to locate points 1, 2, 3, etc.

5) Draw perpendicular lines to the stretch-out line through 1, 2, 3 etc.

6) Transfer the true heights of each vertical edges from the front view using horizontal projection lines onto the corresponding vertical lines of the development to locate 8',5',6', etc

7) To prepare the complete surface development include the true shape of the top cover which is obtained by an auxiliary view as discussed in unit 2 of this text book and the bottom cover of a right prism. See practical example on truncated right prism i.e. development of mail box.

© AAU Ethiopia Not to be republished

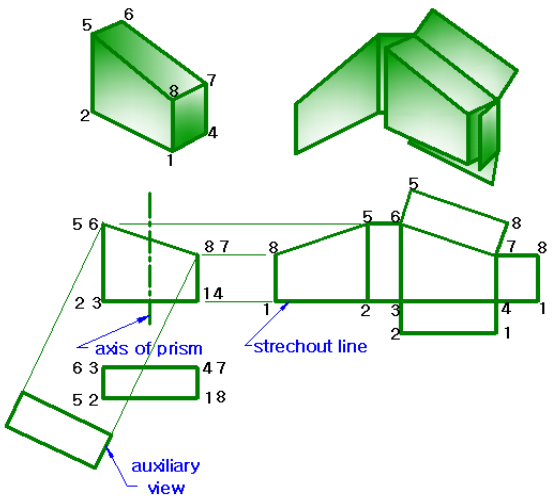

Fig. 5.6 Development of a truncated square prism

Checkpoint 5.3

Prepare the pattern development of a truncated hexagonal prism whose one side length is 15 mm and the longest and shortest vertical edges are 45mm and 25mm respectively.

To make the development of an oblique square prism

Use the same method as that of right prism except a difference that is the oblique prism development doesn't unfold in a straight line, so the stretch-out line is placed through the center of the prism.

1) Draw the front and top views of the prism.
2) Draw an auxiliary section that is perpendicular to the sides of the prism. The auxiliary section gives the true width of the sides.
3) Project the stretch-out line from the location of the auxiliary section. The stretch-out-line is projected from the front view.
4) Measure the true width of the faces along the stretch-out line as shown by points 1, 2, 3, and 4.
5) Draw lines through these points perpendicular to the stretch-out line to form the corners of the prism.
6) Project the end point of the corners to the development. This locates top and bottom ends of the corners.
7) Connect the corners to finish the development of the oblique prism.

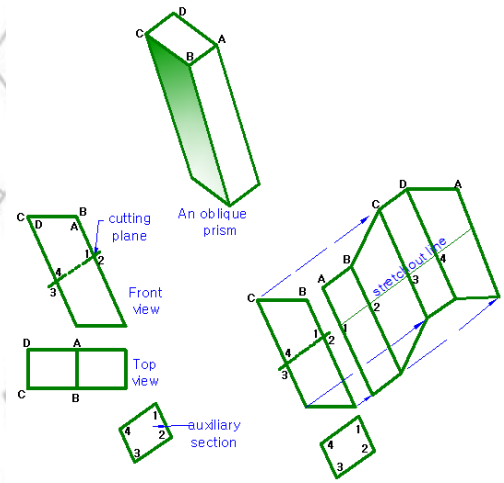

Fig. 5.7 Development of an oblique prism

Checkpoint 5.4

Prepare the development of full oblique octagonal prism whose axis is inclined at an angle of 450 and one side length is 20 mm.

© NCERT Not to be republished

Development of cylinder

Development is another type of solid developed by parallel-line method of development. Cylinder can be thought of as being a many sided prism. In this case the length of the stretch-out line is equal to the circumference of the cylinder. i.e c=2πr or 3D+1/7D where, c=circumference, 2= constant, π = 3.14, r= radius of the circle. The lateral surface development of a full right cylinder is a rectangle with length equal to the circumference of the base circular outline and width equal to the height of the cylinder.

Development of full Cylinder

To prepare the development of a right Cylinder

1) Draw the front and top view of the cylinder.
2) Divide the top circular view into any number of equal parts (Say 12).
3) Label each of the division points on the top circular view (1-12).
4) Draw the stretch-out line. On the left end, draw a perpendicular line. Make it the same length as the height of the cylinder.
5) Measure the straight line distance between two division points on the circular view (i.e. chordal length to approximate arc length).
6) Step off these distance on the stretch out line as many division as you have on top view to give circumference length or divide the circumference length (C=2πr) into same number of divisions you have on top view for more accurate surface development.
7) On the last division, draw a line perpendicular to the stretch-out line. Draw the top edges of the cylinder parallel to the stretch-out line.

This method of obtaining circumference is approximate. The distance used is chordal distances. A chord is shorter than its arc length. A more accurate method of obtaining circumference is using mathematics i.e. C = 2 πr.

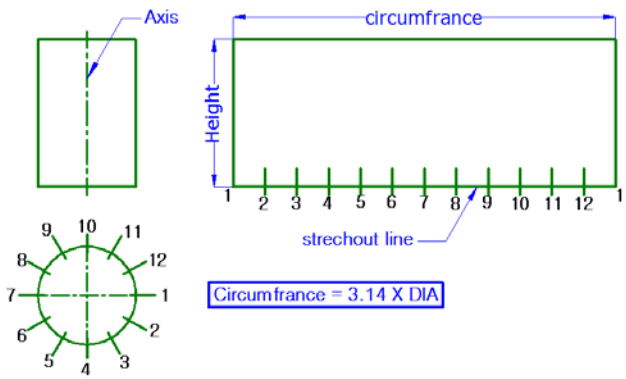

Fig. 5.8 Development of cylinder.

Development of truncated Cylinder

To prepare the pattern development of truncated cylinder

1) Draw the front and top views of the truncated Cylinder.
2) Divide the circular top view into any number of equal parts (say 12).
3) Project these points into the front view.
4) Draw the stretch-out line perpendicular to the axis of the Cylinder.

© NCERT not to be republished

5) Measure the straight line distance between two division points on the circular view (i.e. the chordal length approximating the arc length.)

6) Step off these distance on the stretch out line(for approximate development) or divide the circumference length into the same number of divisions or sectors you have on top view (for relatively accurate development.)

7) Draw perpendicular lines through each point on the stretch-out line starting with shortest edge.

8) Project points from the top outline to edge view of the inclined surface on front view and then to the pattern development vertical edges so as to get the points to be joined with irregular curve.

9) For the complete surface development include the top and bottom surfaces. Here the tangent line is used to get the exact tangent point between the top cover and the lateral surface, the true shape of the top cover is obtain in auxiliary view.

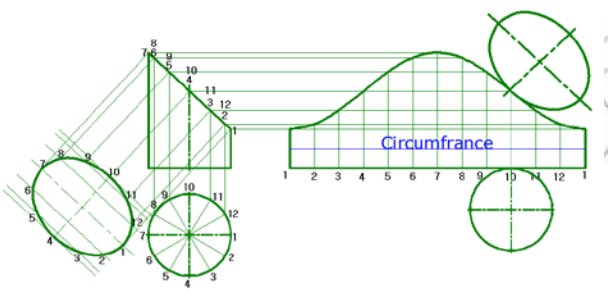

Figure 5.9 Development of truncated cylinder.

Checkpoint 5.5

Prepare the development of the given truncated cylinder.

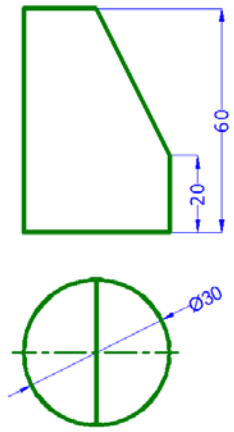

Development of oblique cylinder

Since an oblique cylinder theoretically may be though of as a regular oblique prism with an infinite sides so the principle of development is more or less similar to that of oblique prism discussed earlier with minor variation.

To prepare the development of an oblique cylinder.

1) Draw the front and top view of the oblique Cylinder.
2) Draw the right auxiliary section.
3) Divide the right section into say example 16 equal parts to get 16 surface line elements and label them in all views.
4) Draw the stretch-out line w-x i.e. equal in length to the circumference of the right section circle.

5) Divide the stretch-out line into the same number of equal parts as in step 3 locating points 1, 2, 3, etc.
6) Draw lines perpendicular to the stretch-out line through points 1, 2, 3 ...etc.
7) Transfer the true length of each surface line elements from the front view to the pattern development to locate points A, B, C etc.
8) Draw smooth curve passing through point A, B, C... etc, using French curve.
9) Attach the top and bottom cover at the tangent points established or the development by using tangent line as shown on the figure below.

The top and bottom covers (i.e. ellipse) will be constructed by using major axis AH and minor axis KJ of the top view (use any ellipse construction method.)

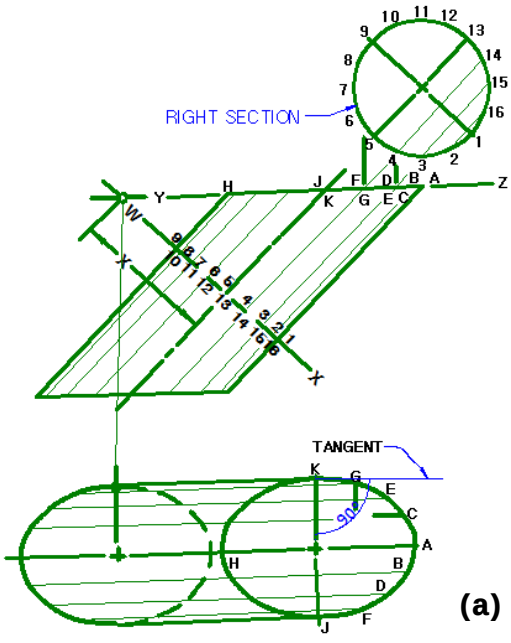

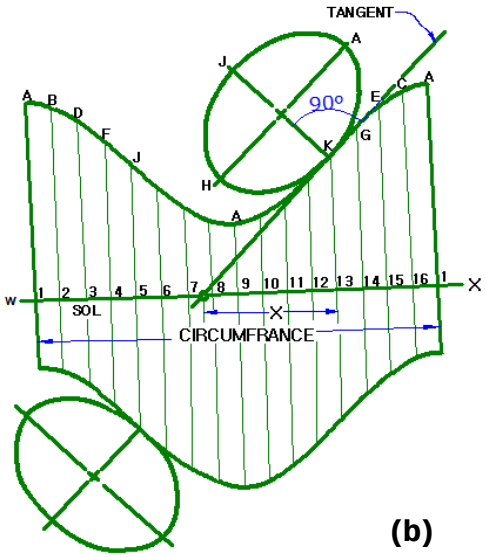

Fig. 5.10 Development of oblique cylinder

5.2.1.2. Radial-Line Development

This method of development is used to develop shapes that are based on pyramid and cone which have a series of lines which radiate from the apex down to the base of the object and requires the determination of true length of foreshortened lateral edges before attempting to prepare the development.

Development of right pyramid

A right pyramid is a pyramid having all the lateral edges from vertex to base of equal length.

In the process of developing a right pyramid, a large arc is made with radius equal to the true length of the lateral edge of the pyramid. Then, points are marked on this large arc using compass by setting off arcs with radius equal to the true lengths of the base sides of the pyramid. The true lengths of the edges of a pyramid are found by using the triangulation method.

© Not to be republished

To draw the development of full pyramid.

1) Draw the front and top view of the by pramid.
2) Label all corners on top view and front view as well.
3) Find the true length of edge (e.g. 0-1) using revolution or other method.
4) Draw a large arc with 0 as center and radius equal to the true length of edge 0-1 .
5) Drop a perpendicular (vertical) line from 0 so as to intersect the large arc and get 3 .
6) Start from 3 and step off the true distance 3-2, 2-1, 3-4 and 4-1, which are true lengths of base edges obtained from top view, along the large arc with compass.
7) Join these points with straight line to establish the base edges.
8) Finally join these points (i.e. 1, 2, 3, 4 and 1) to the vertex point to represent folding edges of the solid.

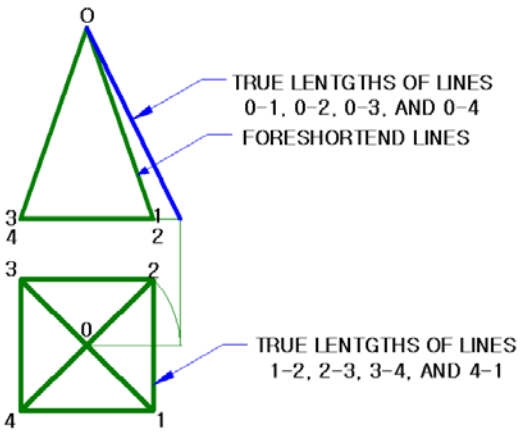

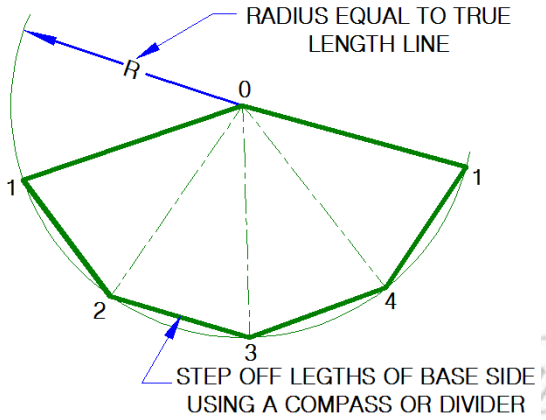

Fig. 5.11 Development of right pyramid.

Checkpoint 5.6

Draw the complete surface development of hexagonal pyramid if one base side length and the altitude are 20 and 50mm respectively.

Development of truncated right pyramid

If a full right pyramid is cut with a cutting plane at a convenient angle other than 90° with the axis the remaining pyramid is called truncated right pyramid and if it is cut perpendicular or at 90^0 angle with the axis. It is called frustum pyramid.

The procedure of development is the same as the full pyramid except that only the truncated edge lines are required.

To draw the development of truncated pyramid.

1) Draw the front and top view of the truncated pyramid.

2) Label all corners on top view and front view as well.

3) Find true length of the full lateral edge of the pyramid on the front view by first revolving line 0-1 of the top view to intersect horizontal center line passing through apex 0 at 1^1 and then project up 1^1 and to front view to intersect the extended base line at 1′, and finally join 0 with 1^1 of front view.

4) Find the true length of the truncated lateral edges (A-l and B-2, C-3 and D-4) on front view by projecting horizontal line from AB and DC to true length edge 01^1.

   Now line E-1′, is the true length of edge C-3 and D-4. Line F-1′, is the true length of edge A-1 and B-2.

5) Draw a large arc with 0 as center and radius equal to the true length edge 0-1′ as shown on front view on a blank space.

6) Drop perpendicular/vertical line from 0 so as to intersect the large arc and establish 3.

7) Start from 3 and step off the true distance 3-2, 2-1, 3-4 and 4-1 from the top view using compass to get the remaining point 1,2 and 4 along the large arc.

8) Join the points located on the large arc with straight line to establish the true base edges on the development.

9) Connect points 1,2,3,4 of the large arc with the apex '0'.

10) Transfer the true lengths of each edges (E-1′ and F-1′,) for the corresponding edge length along lines established at step 8 to get A,B,C,D and A.

11) Let us connect the top cover of the truncated pyramid to edge A-B of the development. To do so first use B as center and true edge length B-C of the development as a radius and strike an arc. Use A as a center and true distance of A-C as a radius as shown to the left of front view and strike another arc so as to intersect the previously drawn arc and establish 'C' of top cover. Use A as a center and true distance A-D of the development as a radius and strike an arc.

    Use B as a center and true distance of B-D(equal in length to A-C) as a radius and strike another so as to intersect arc drawn at previous step and establish "D" of the top cover . Join points A, D, C and B to complete the top cover.

Note: You can first draw the true shape of the inclined surface by auxiliary view method and use two of the corners as center and the diagonal distance as a radius accordingly as discussed above to establish the remaining two corners and complete the top cover.

To attach the bottom cover on the development.

i. Select one of the base edges upon which to connect the bottom cover.

ii. Draw perpendicular lines through the end points of the edge selected to the direction the cover is drawn.

© WOLEKDR Ethiopia Not to be republished

iii. Transfer the true adjacent base edge lengths along these perpendicular lines.

iv. Connect the points obtained along these perpendicular lines at step III with straight line parallel to the initial base edge selected.

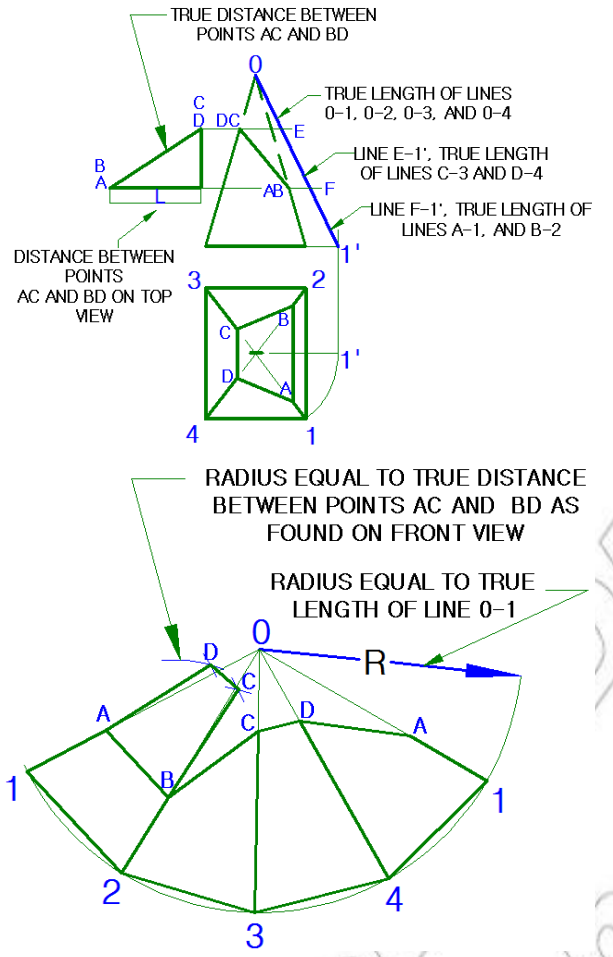

Fig. 5.12 Development of truncated pyramid

Checkpoint 5.7

Prepare the complete surface development of the following trun-cated hexagonal pyramid shown below

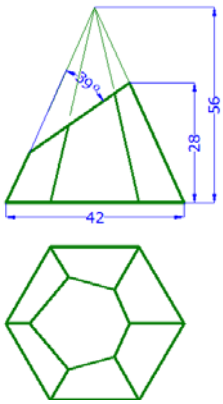

Development of oblique pyramid

Oblique pyramid is a pyramid having its axis at an angle other than 90^0 with the base of the solids, so that paired or all lateral edges have unequal lengths. So the true length of these edges should be found as shown in Fig.5.13.

To prepare the development of full hexagonal oblique pyramid.

1) Draw the front and top views of the oblique pyramid (Fig.5.93).
2) Label the edges of the pyramid on both top and front views.
3) Construct the true length diagram that shows the true length of all lateral edges on the front view.
4) Start the development by first drawing line $0_F\ 1_r$ (the shortest edge) from the true length diagram.

© Maharashtra State Bureau of Textbook Production and Curriculum Research, Pune. Not to be republished

5) With 0_F as center and radius $0_F\ 2_r$ drawn an arc and adjust your compass with side 1-2 as radius from top view and draw another arc to intersect the first arc drawn at 2.

6) In a similar manner locate the other points i.e 3, 4, 5, 6.

7) Join points 1, 2, 3, 4, 5 and 6 to each other and to point 0. Also attach the base with the same procedure discussed on right pyramid to make the development complete.

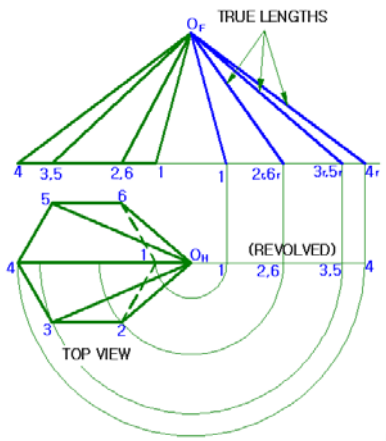

Fig. 5.13 True length diagram

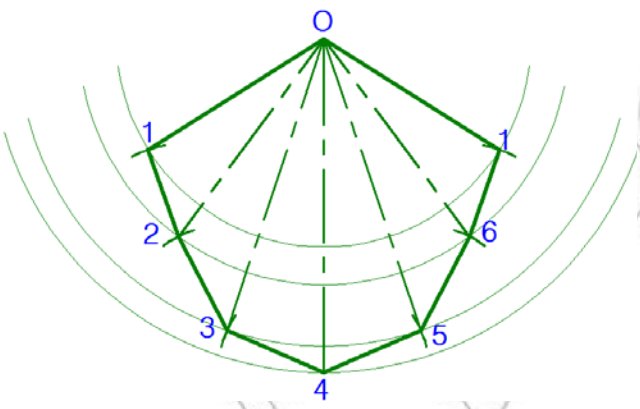

Fig. 5.14 Development of oblique pyramid.

Checkpoint 5.8

Prepare the development of the given square oblique pyramid

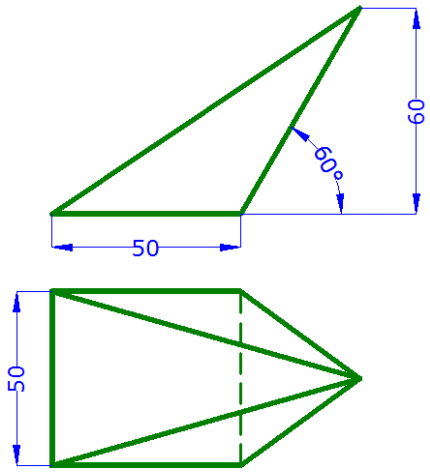

Development of truncated oblique pyramid

The procedure of finding the true length of the truncated edges is similar to that of truncated right shown discussed earlier. The method and procedures of surface development is also similar to that of full oblique pyramid (See Fig. 5.15).

Key terms

- ***Frustum:*** is a section of a conical shape.
- ***Pattern making:*** is the process of creating a 2D map of a 3D shape to be formed.
- ***Patterns:*** are two dimensional maps of three dimensional shapes.
- ***Radial lines:*** are the development lines used to construct a pattern for a shape. Also known as radial guidelines.

© TEDPE Not to be republished

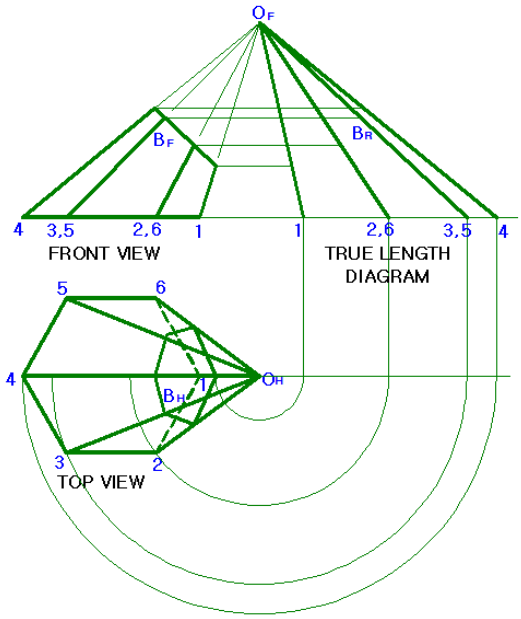

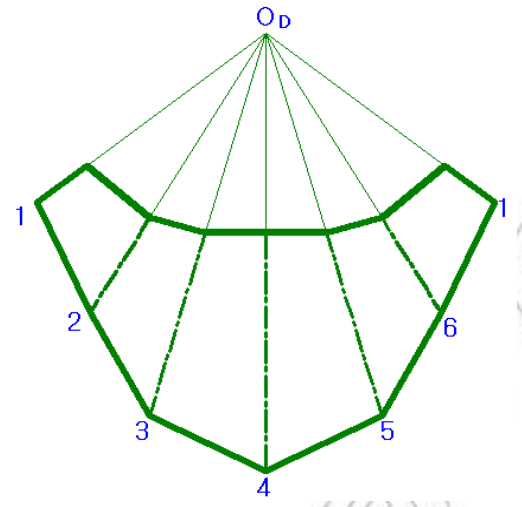

Fig. 5.15 Development of truncated oblique pyramid.

Development of cone

The development of a cone is similar to that of pyramid, use the radial line method of development. The cone is thought of as a many sided pyramid.

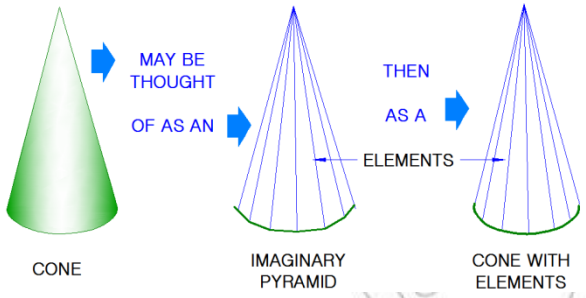

Fig. 5.16 Development of cone.

The development of a right full cone is simply a sector whose radius is equal to the slant height (hypotenuse) of the cone and whose arc length is equal to the circumference of the base of the cone. The subtended angle can be found using the following formula.

$$Ø = \frac{r}{s} \times 360^0$$

Where: r- is the radius of the base circle of the cone and s is the slant height (hypotenuse) of the cone.

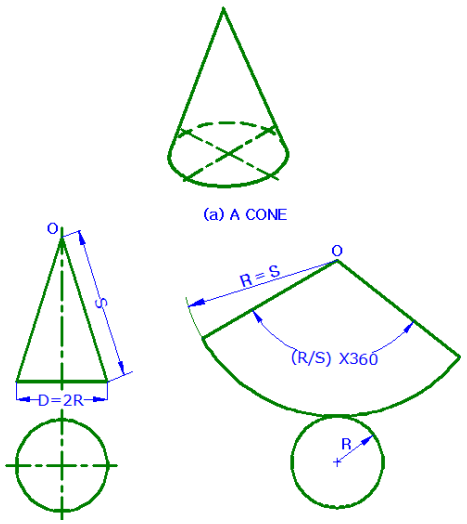

Fig. 5.17 Development of right cone

The proportion of the height to the base diameter determines the size of the sector as shown on Fig.5.18.

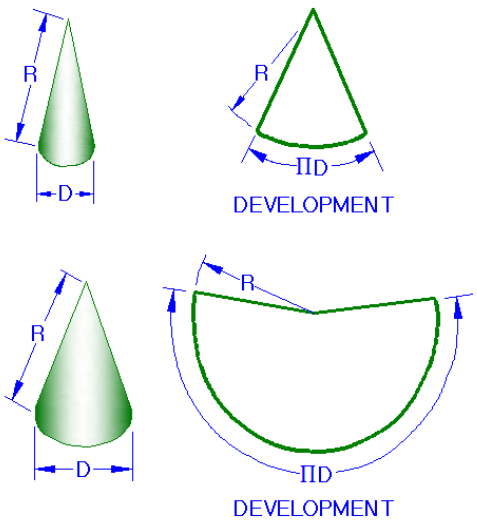

(A) PROPORTION OF HEIGHT TO BASE

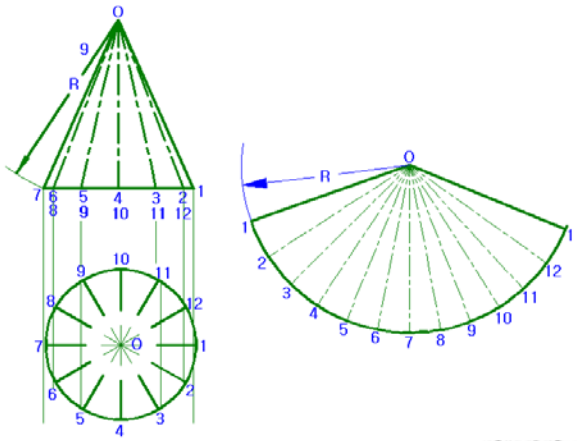

(B) DEVELOPMENT PROCEDURE

Fig. 5.18 Development of right cone

Steps to draw the development of a cone

1) Draw the front and top view of the full right cone.
2) Divide the top view into a convenient number of equal divisions in this instant into 12.
3) Label all division points on top view and their corresponding points on front view.
4) Draw a large arc on the development using 0 as a center and true length edge 0-1 (0-7) of front view as radius.
5) Take a single chordal length of the top view to approximate the arc length with compass and step off along the large arc equal divisions as you have on top view.
6) Join the end point of the large arc to apex '0' to complete the lateral surface development.

Note: You can also attach the bottom cover taking its true shape from top view.

To draw development of frustum of a cone.

Draw the development of the full cone as shown in Fig 5.18.

1) Draw an arc on the development of the cone with O as center and OA as radius to locate the top edge of the frustum. (Fig.5.19).
2) Include the top and bottom cover obtained from top view to make the pattern development complete.

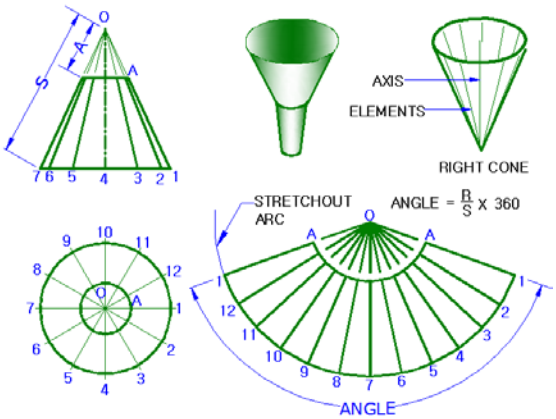

Fig. 5.19 Development of frustum of a cone

© MoE | DR Ethiopia Not to be republished

Development of truncated right cone

The development of truncated right cone is similar to the development of full cone except minor difference resulting from the truncated element lines.

Before preparing the pattern development of a truncated right cone, the top view of the truncate part (i.e. the ellipse) and its true shape should be complete and found respectively.

To complete the top view truncate part (ellipse) of the cone

1) Draw the front and top view of the truncated cone with its apex '0'
2) Divide the top view into any convenient number of equally spaced element line say 12 then label them in a clockwise direction.
3) Project these element lines from top view to the base of front view and then to the apex '0' so as to get points a, b, c etc on the edge view of the ellipse.
4) Project points a, b, c, etc from front view back to top view on the corresponding elements lines to get points a′, b′, c′ etc
5) Draw smooth curve through points a′ b′, c′ etc to complete the top view of the ellipse.
6) Draw the true shape of the ellipse using auxiliary view method to help complete the pattern development.

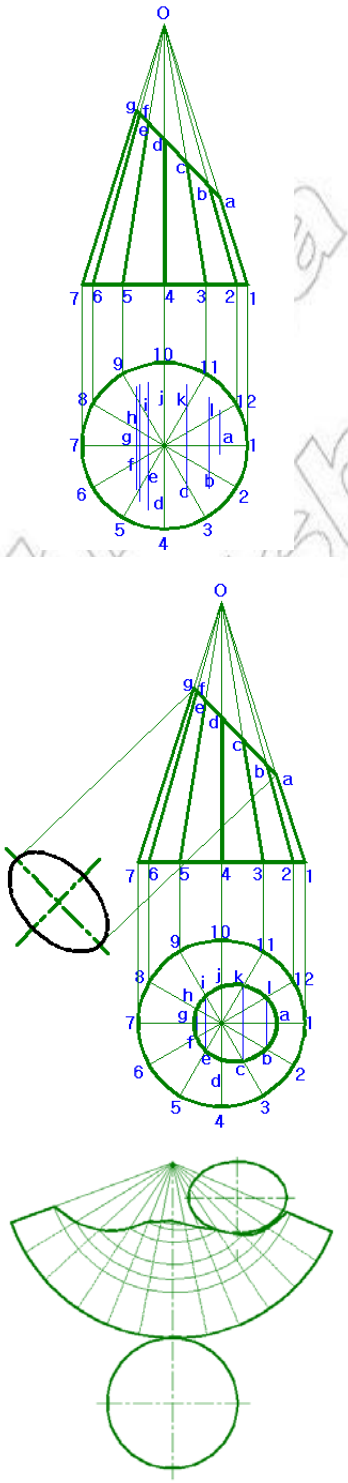

Fig. 5.20 Development of truncated cone.

© MoE-EDR Ethiopia Not to be republished

7) Project points a, b, c, etc from the edge view of the ellipse to the true length line 0-1 of front view to get the true lengths of all other element lines.
8) Draw the development of the full cone as discussed earlier.
9) Transfer the true length of all element lines (eg.0-a, 0-b, 0-c etc) from front view to the corresponding element lines of the development to locate points a, b, c, etc
10) Draw smooth curve through points a, b, c, etc obtained on the development and attach the base and the top elliptical surface to complete the development.

Checkpoint 5.9

Prepare the development of the following truncated cone.

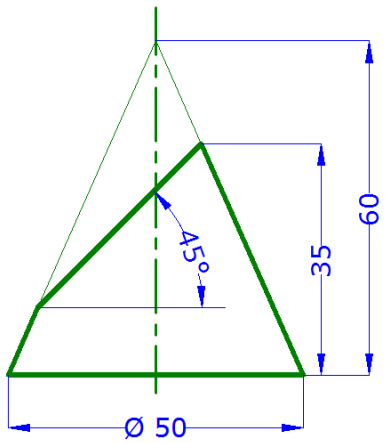

Development of oblique cone

Oblique cone can have either a circular or elliptical base as shown on Fig.5.21, either type can be developed approximately. The development of an oblique cone may be made in a manner similar to the development of an oblique pyramid by considering the cone as a pyramid with infinite number of edges however here finite number of edges (i.e. 12 element lines) are used.

To prepare development of oblique cone

1) Draw the front and top views of the oblique cone.
2) Divide the circular view of top view into any number of equal parts (say 12).
3) Label the points in a clockwise direction starting from 1 as shown on figure. 5.21 and connect them to apex 0 to establish elements lines on top view.
4) Project point 1, 2, 3, etc from top view to the base edge of front view and label them accordingly.
5) Draw the element lines from each base edge points to apex '0' of the front view. This divides the lateral surface into series of triangles.
6) Construct the true length diagram that shows the true length of all element except 0-1 and 0-7 which appeared as true length on front view by revolution method
7) Make the development by laying out the triangles in the order they are found on the views of the cone. Start with the 1st triangle 0-1-2

First layout true length side 0-1. All radiuses for other lateral elements and arc length are taken from true length diagram and top view respectively. Draw an arc using 0 as a center

© MoE DR Ethiopia Not to be reproduced

and 0-2 as a radius. Draw another arc with 1 as center and 1-2 as radius to intersect the first arc drawn and establish 2 on the development. Again draw an arc using 0 as a center and 0-3 as a radius. Draw another arc with 2-3 as a radius to intersect the previous arc drawn and establish 3 on the development.

8) Repeat these steps for each element until all points on the development are shown.
9) Draw a smooth curve through points 1, 2, 3 etc using French curve. You can also attach the base to complete the development.

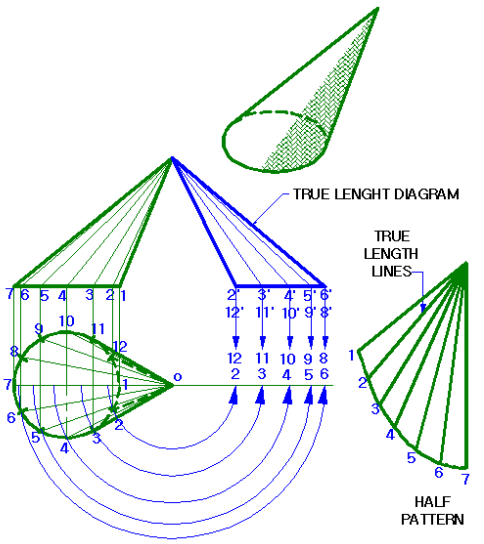

Fig. 5.21 Development of oblique cone.

Development of truncated oblique cone.

The procedures of finding the true length of the truncated edges is similar to that of truncated oblique pyramid and other procedures of development construction is Similar to that of oblique cone.

5.3 Intersection Between Geometrical Solids

List the geometrical solids you know.
Imagine when some of the solids intersecting and make an intersection line or curve between them.

A thorough knowledge of this subject would help greatly a student of engineering or an engineer engaged in his/her practical field.

A machine part of any kind normally may be assumed to consist of a number of geometric shapes arranged to produce the desired form. The common intersecting geometric shapes in sheet metal work like prism, cylinder, pyramid and cone may sometimes be combined or interlocked in a pattern that is easily represented. However in this text only intersection of solids based on prism and cylinder is discussed. In sheet metal work, the line of intersection between intersecting or penetrating solids will have to be found out before the development of the solids is prepared. The principles of intersection have many more practical applications in making of ducts, pipe joints, containers, fitting of a steam dome on cylindrical boiler, cutting of openings in roof surface for flues and stacks, etc. can be mentioned.

Classification of surface intersection

A) Intersection of two solids with plane surfaces (Example intersection of prism and pyramid). The common intersection outline becomes a straight line so it is called as line of intersection.

© MoE Not to be republished

B) Intersection of two solids one with plane surface and the other with curved surface (Example intersection of prism and cylinder). When they intersect each other the common intersection outline in majority case becomes curve, but sometimes partially line and partially curve depending on the shape, size and orientation of the solids under intersection.

C) Intersection of two solids bounded by curved surfaces. (Example intersection cylinder and cone). When they intersect each other, the common intersection outline becomes a curve so it is called as curve of intersection and the manufacturing of which will directly depends on the development of solids intersected.

5.3.1. Piercing point

Bring a paper and pierce it with your pen or pencil and observe the exact contact point of the pen and the paper.

Before trying to determine the line or curve of intersection resulting from intersection or penetrating solids, we must be able to determine a piercing point.

Piercing point is the point of intersection of a line and a plane. The line can represent the lateral edge of a plane solid or the element of a curved solid. The plane can represent the surface of a solid.

A number of piercing points so located by the intersection of the edge or elements of one solid with the plane or surface of another intersecting solid will be joined to each other using set square or French curve to establish the required line or curve of intersection.

Finding piercing point resulted from intersection of line EG and triangular plane ABC (Fig 5.22).

Note: Line ED can represent the lateral edge of one of intersecting element and plane ABC, the lateral surface of another intersecting element.

The piercing point is obtained by assuming a cutting plane (Containing line EG and at the same time passing through the triangular plane ABC using the two given views of the line and plane.

Steps to find the piercing point

1) Draw the front and top views of the two intersection elements (line and plane).
2) Label the line as EG and the plane as ABC.
3) Introduce any convenient cutting plane containing line EG. A cutting plane perpendicular to one of the principal plane (in this case horizontal plane) is convenient because it appears as an edge (line) view in a principal view (i.e. top view.)
4) The line of intersection 1-2 is determined by the intersection of plane ABC and the assumed cutting plane.
5) Since line EG and line of intersection 1-2 both lie in the same cutting plane, they intersect each other to locate point “P”.
6) Since line of intersection 1-2 also lies in plane ABC, point ‘P’ is now the required piercing point under the intersection of line EG and plane ABC.

© MoE, FDRE Ethiopia Not to be republished

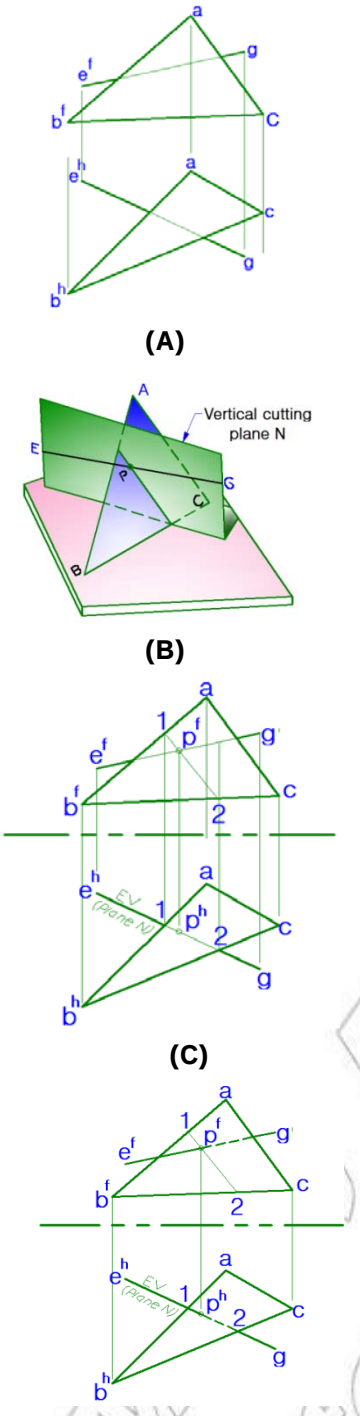

Fig. 5.22 Finding piercing point of a line and a plane intersecting.

5.3.2. Methods of Locating Point of Intersection.

There are two commonly known methods of locating point of intersection between intersecting solids.

1) End view method
2) Cutting plane method

1) End view method

This method is commonly used to find the line of intersection between intersecting solids with plane surfaces.

Begin by labeling the corners/vertices of a plane figure or surface of one of the intersecting solids on end view.

Note: The plane figure/surface labeled on the end view represents the edge view of the lateral surface and the labels show the point view of the lateral edges along which the line of intersection lies.

2) Cutting plane method

This method is used to find the line of intersection between intersecting solids with both plane and curved surfaces, so it is preferable for curved surfaces.

Pass a series of imaginary cutting planes as required through both solids under intersection used to locate points on the line/curve of intersection, resulted from intersection of cutting planes with edge view of the lateral surface of both solids on the views.

© MoE FDRE Ethiopia Not to be republished

5.3.3. Intersection of two Regular Prisms and their Development.

The intersection of two prisms is found by locating the piercing points of the edges of one solid on the surface of the other solid using end view (side view) method.

Steps to find the line of intersection of the two intersecting solids (Fig.2.23).

1) Draw the front and top views of both prisms.
2) Label the corners of the end view of the horizontal prism in a clock wise direction as shown by a, b, c and d along which the piercing points lie.
3) Project points a, b, c and d from end view to top view to intersect the edge view of the lateral surface of vertical prism along which piercing points again lie.
4) Project the same points a, b, c and d from top view down to front view to intersect the projection lines of corresponding points from end view and establish the required piercing points that lie on the line of intersection.
5) Connect the piercing points obtained at step 4 to complete the line of intersection of the two intersecting prisms.

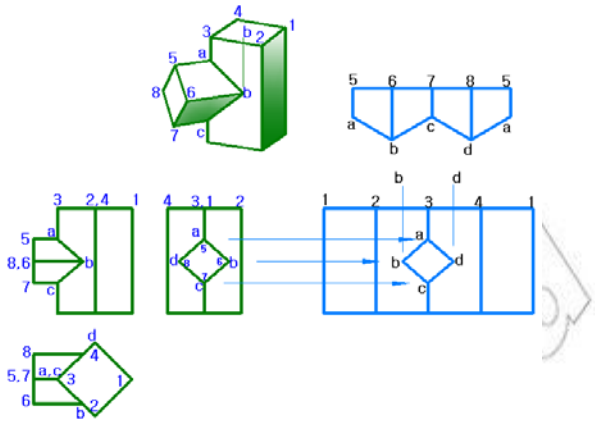

Fig. 5.23 Finding line of intersection of two intersecting prisms.

Steps to prepare the lateral surface development of the vertical prism.

We are using parallel-line method of development as the solid to be developed is a prism. So follow the basic procedures to be used for this method as discussed earlier.

1) Draw the top and front views of the prism. (As already shown)
2) Label all the top corners of the prism in a clockwise direction as (1, 2, 3, and 4) also show corresponding labeling on front view.
3) Draw the stretch-out base line passing through the base of the front view.
4) Transfer the true length edges of the top view 1-2, 2-3, 3-4 and 4-1 along the stretch out line and label them.
5) Draw perpendicular lines through labeled points of the stretch-out line to establish the various lateral edge heights.
6) Project the piercing points (a, b, c and d) from front view onto the development to intersect corresponding lateral/vertical

© MoE FDRE Ethiopia Not to be republished

edges and establish the line of intersection.

i.e. points a and c lie on lateral edge 3 where as points b and d lie on assumed lateral edges whose true distance can be measure from edge 3 of top view and transferred along the stretchout line each side.

5) Connect the piercing points so obtained at step 6 to complete the line of intersection on the development.

To develop the small horizontal prism follow the same steps as the vertical prism provided that the true length edges to be transfer along the stretch out line are obtained from end/side view i.e. 5-6, 6-7, 7-8 & 8-5 and the true heights of the lateral edges are obtained either from front view or top view to get piercing points a,b,c and d finally connect these points to complete the corresponding line of intersection on this prism.

Intersection of two prism at an angle different from 90°.

The step to find the line of intersection is more or less similar to the previous case.

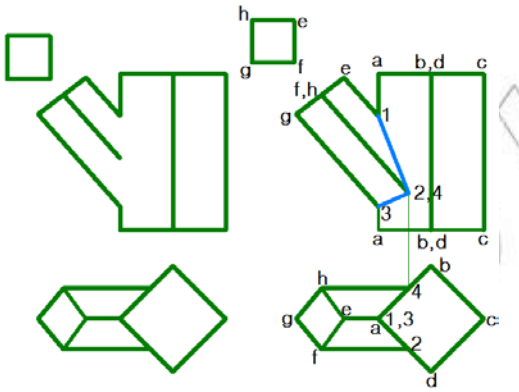

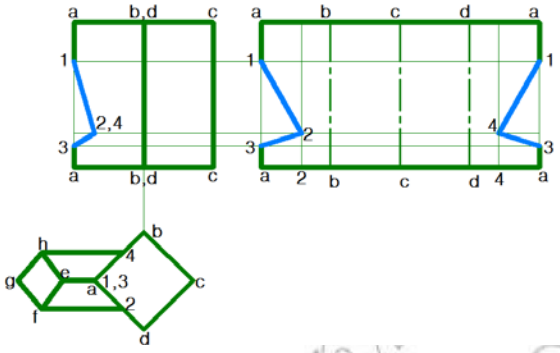

Fig.5.24 Finding line of intersection between intersecting prism at an angle and their development

If the axis of the two intersecting solids intersect at right angle or other angle regardless of their sizes and orientation we will obtain a visible line of intersection on the front view. However the possibility of getting hidden and visible line of intersection is high under the following conditions: If the axis of the intersecting solids do not intersect or apart each other by some distance, If the shapes of the solids under intersection are different and If different arrangement/orientation is used than a regular arrangement.

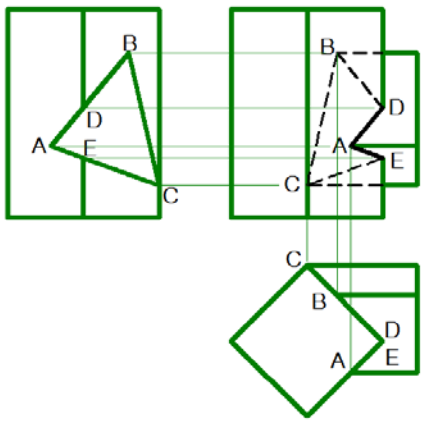

Fig.5.25 Visible and hidden line of intersection of intersecting prisms.

So you see that on front view of Fig.5.25 line DA and AE are visible line of intersection, where as line BD, BC, CE are Invisible/hidden line of intersection.

Checkpoint 5.10

Find the line of intersection created between the following intersecting solids and prepare the lateral surface development of both solids.

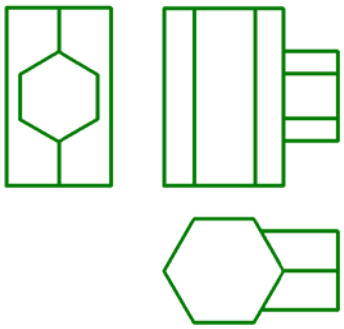

5.3.4. Intersection of two Cylinders and their Development.

The curve of intersection of two intersecting cylinders is found by using a series of cutting planes. So we are using cutting plane method.

Steps to find the curve of intersection of two intersecting cylinders at right angle (Fig 5.26).

1) Draw the front and top views of both cylinders and circular view of the horizontal cylinder on the front or side view is required.
2) Pass a required number of vertical cutting planes through both the cylinders by the following two options.
   i. By dividing the circular view of the horizontal cylinder into say 12 equal parts on side view or draw elements along which the cutting planes are assumed to pass through
   ii. By dividing the edge of the horizontal cylinder on top view into defined number of equal parts. Including the center line as marked as A,B,C,D.
3) Label all the points established by the intersection of the circular view with cutting planes both on top view (i.e. 1,2,3,4,5,6 and 7) front view (i.e. A,B,C,D) where only half view of the circle is used.
4) Project points established at step 3 from top view of vertical cylinder and end view of horizontal cylinder to the front view to get corresponding intersection points.
5) Connect intersection points obtained at step 4 with French curve so as to get the required curve of intersection.

Steps to prepare the lateral surface development of the vertical cylinder (Fig 5.26)

As discussed earlier parallel line method of development is used to develop the cylinder.

1) Draw the front and top views of both cylinders. As discussed already.
2) Draw the stretch out line passing through the base of the front view whose length is equal to the circumference length of the large circle of top view.

© MoE FDR Ethiopia Not to be republished

3) The total height drawn perpendicular to the stretch-out line is directly projected from the front view.

4) Draw the center line perpendicular and passing through the mid point of the stretch-out line.

5) Draw the other lines representing the cutting plane parallel to the center line and through points 1, 2, 3 etc located by taking the chordal lengths X,Y, etc. from top view onto the development.

6) Project the points of intersection from the curve of intersection of front view to the corresponding cutting plane lines to get another intersection points on the development.

7) Connect these points with French curve to complete the shape of the opening into which the small cylinder fits.

The lateral surface development of the small horizontal cylinder can be made in a manner similar to the development of truncated cylinder.

Key terms

Stretch out: is two dimension patterns of a three dimensional object.

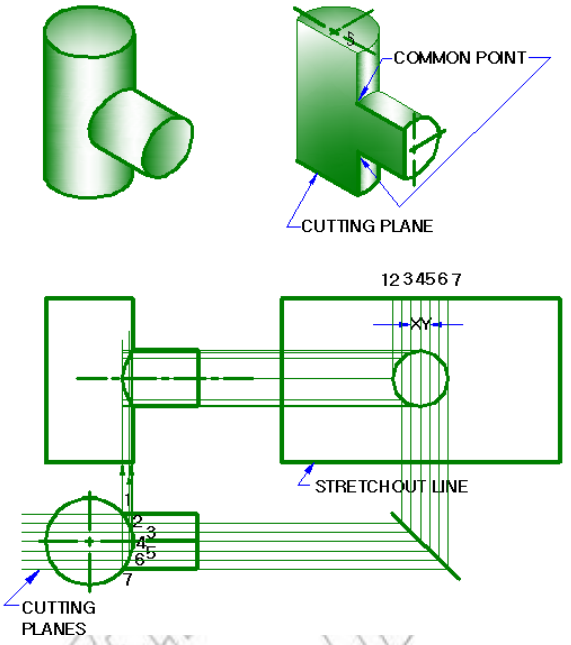

Fig. 5.26 Finding the curve of intersection and development of intersecting cylinders at right angle.

Steps to find the curve of intersection of two intersecting cylinders at an angle (Fig.5.27 (A)).

1) Draw the front and top views of both cylinders under intersection.

2) Draw the auxiliary view of the intersecting cylinder at an angle as half/full circle and divide it into equal parts to establish surface line elements on its lateral surface.

3) Label these points and project them to corresponding elliptical outline on top view.

4) Project all the points from the elliptical outline to circle representing the edge view of the vertical cylinder on top view.

5) Project points from circular view of top view to front view to intersect corresponding surface line element of the intersecting cylinder at an angle.

6) Connect points obtained at step 5 to complete the required curve of intersection.

To develop the lateral surface of the vertical cylinder (Fig. 5.27(B)).

1) First draw the development of the full cylinder as discussed earlier.

2) Consider appropriate number of surface line elements on the cut portion of the cylinder then draw these elements on the development by transferring the spacing between them from the top view to the development.

3) Transfer the lengths of these elements from the front view to the development to locate points on the line of intersection.

4) Connect the points so obtained in step 3 to complete the curve of intersection on the development.

The lateral surface development of the cylinder intersected at an angle can be drawn in a similar manner to the development of truncated cylinder.

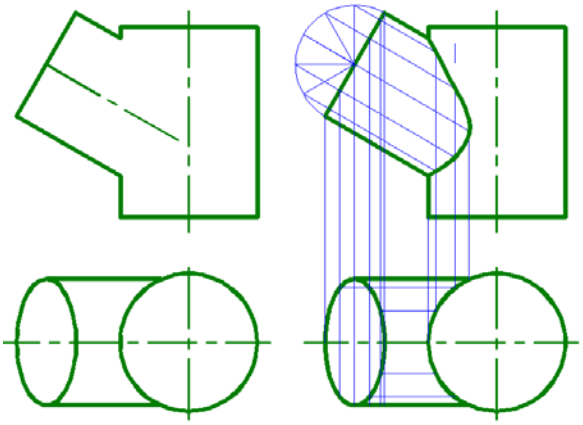

(A) Intersection of two cylinders

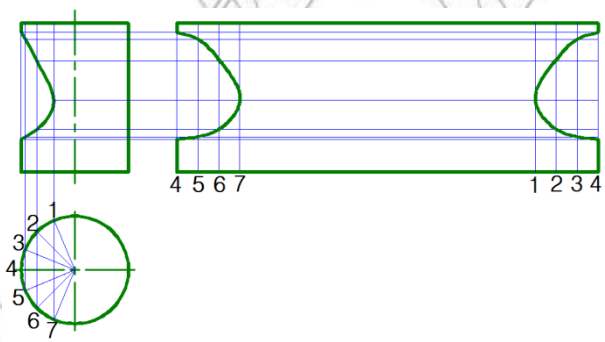

(B) Development of the lateral surface of the vertical cylinder

Fig. 5.27 cylinder intersect at an angle

Checkpoint 5.11

Find the line of intersection and prepare their lateral surfaces' development of two intersecting cylinders at right angle. The diameter and length of the horizontal cylinder are 50mm and 80mm, respectively. The diameter and height of the vertical cylinder are 40mm and 80mm, respectively.

Key terms

Truncate: to cut the top of a shape along a plane that is not parallel to the base.

Unit Summary

A layout of the complete surface of an object is called a development or pattern. If we wanted to make an object such as a cone, prism or pyramid a development may firstly be required. The development shows the true sizes of the surface of the object. A development should be drawn with the inside face up.

In prism development a development of only the sides of an object without the top or base is called a lateral development. With the top and bottom surfaces included it is called a full development. The true lengths of the lines must always be determined.

In the development of a cylinder firstly divide the circumference into elements. Then use the true length of these elements in the development.

While developing a pyramid first determine the true lengths of the edges and base.

Transition Pieces are pieces that change from one shape to another. So to develop a rectangular transition piece: the true lengths of lines must be determined. Lines that are not parallel to the frontal plane in the top view are not true length in the front view.

We can develop a transition piece that connects two circular pipes by stepping of the distance between points in the top view and using the height of the lines in the front view, the true length of the lines can be determined.
Intersection of two cylinders is possible by projecting data points in the top view down to the front view, obtaining both the height and width of the position of the points, the complete intersection of the two solids can be obtained.

For the Intersection of a cone and cylinder: The cone base must be divided into sections and then projection lines are projected up to the vertex of the cone. The intersection points can then be established on these projection lines by projecting from the front view.

Exercise

EXERCISE I

Prepare the complete surface development of the following shapes.

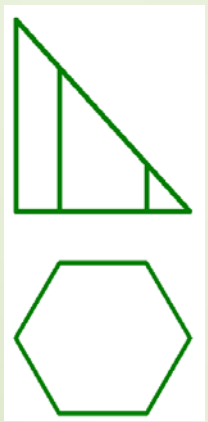

(A)

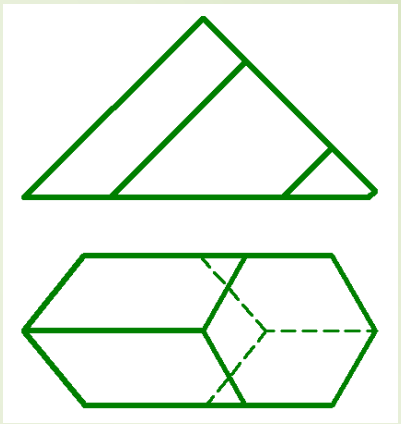

(B)

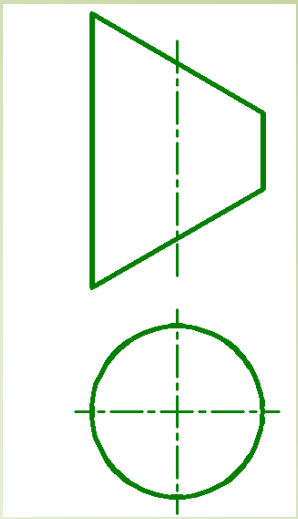

(C)

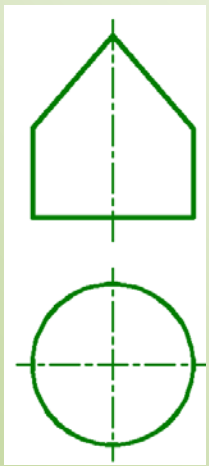

(D)

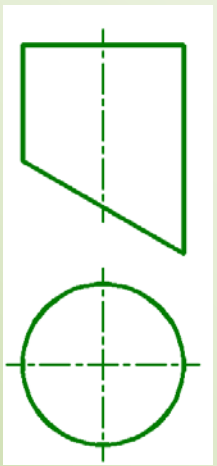

(E)

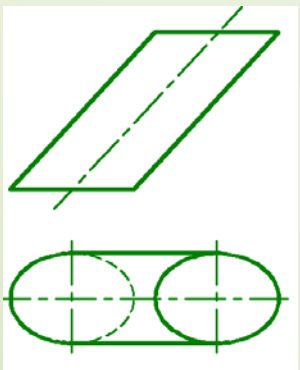

(F)

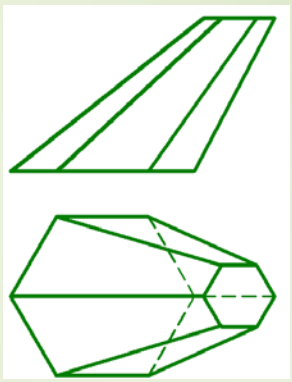

(G)

EXERCISE II

Find the line of intersection and then prepare the lateral surface development of the following intersecting solids.

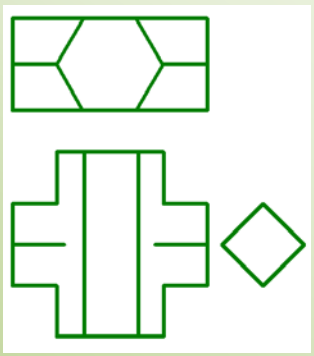

(H)

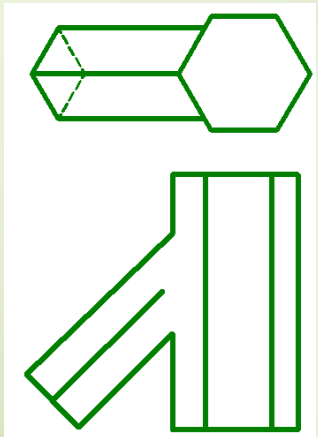

(I)

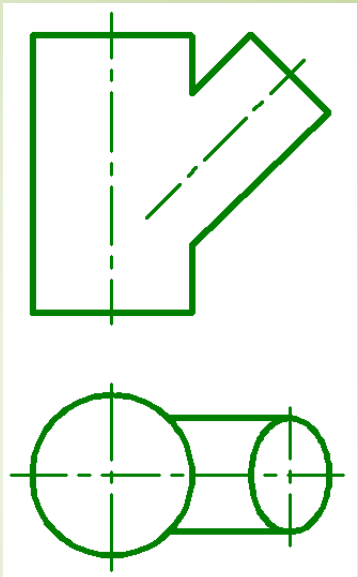

(J)

© MoE, FDI
Not to be rep

Project:

Develop the lateral surface with the upper and lower cover of the given drawing

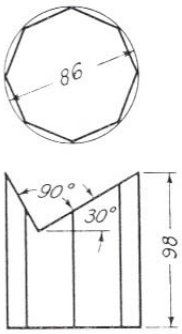

(1)

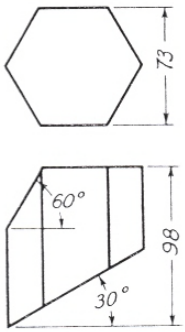

(2)

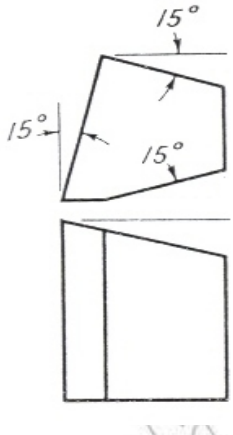

(3)

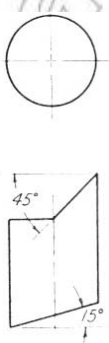

(4)

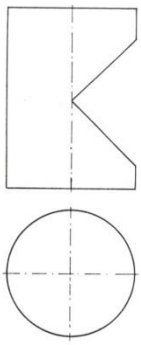

(5)

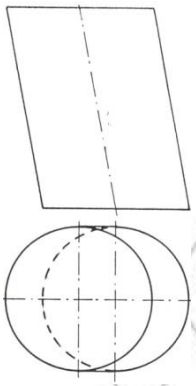

(6)

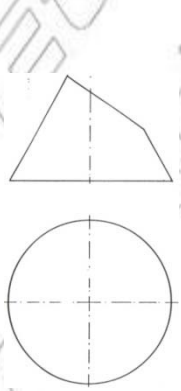

(7)

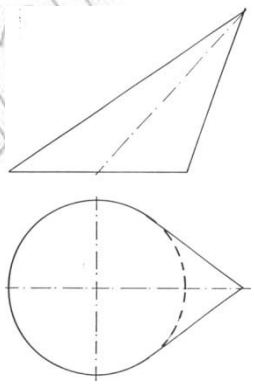

(8)

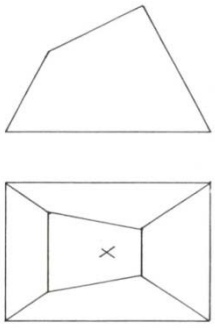

(9)

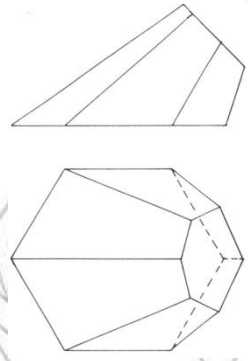

(10)

(11)